ASTRAPROM d.o.o.
since 1994

Tecma Drive,S.L.
PROFESSIONAL FOR ROTATION

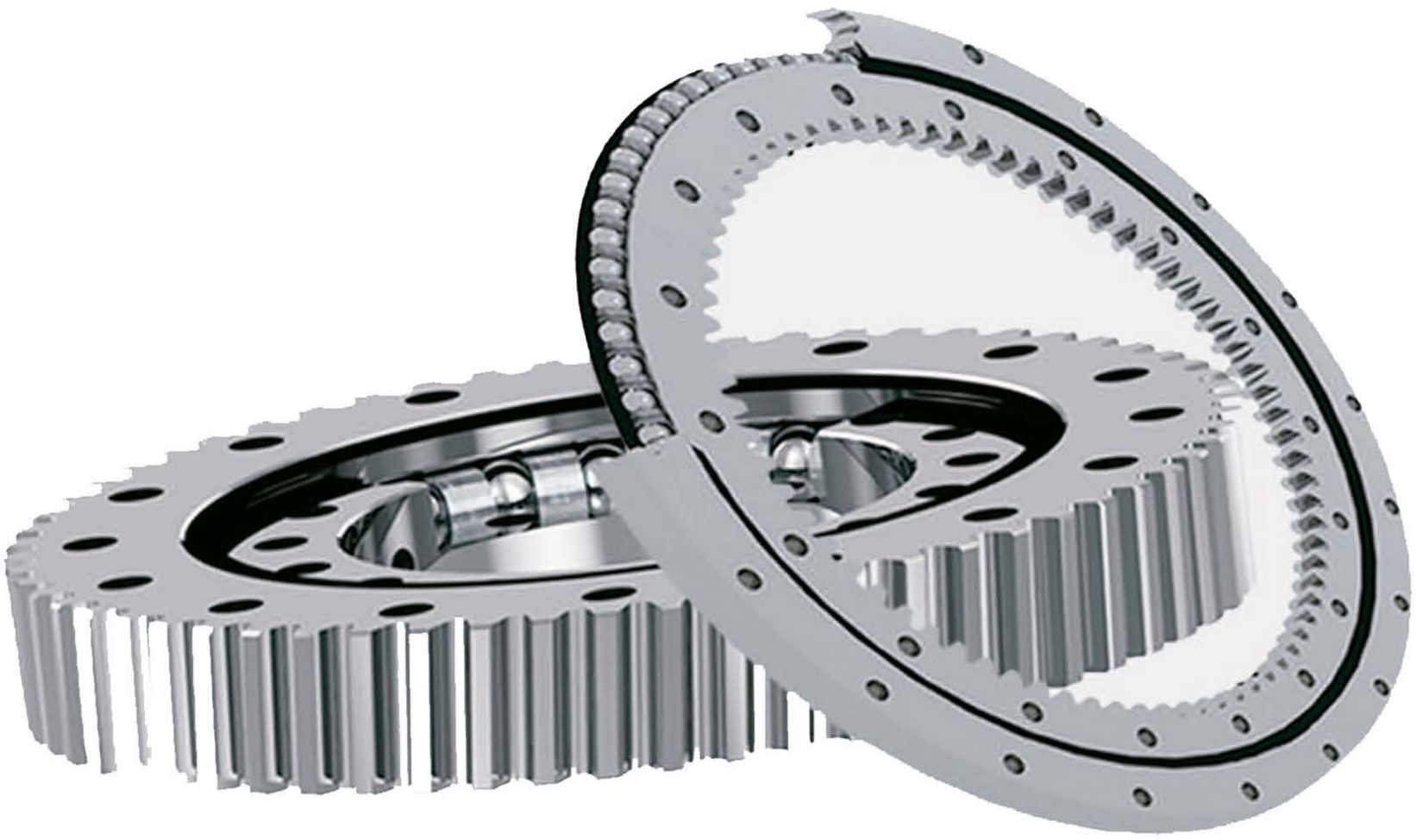

Slewing ring catalogue

KATALOG OKRETNIH PRSTENOVA

ASTRAPROM d.o.o.
info@astra-prom.hr
www.astra-prom.hr

Tecma Drive, S.L.
info@tecmadrive.com
www.tecmadrive.com

KALKULACIJA OKRETNOG PRSTENA / Calculation for slewing ring

Pri odabiru okretnog prstena treba uzeti u obzir sljedeće sile: ukupna aksijalna sila Fa (104N), ukupni moment prevrtanja M (104Nm), ukupna radijalna sila Fr frakcijske površine momenta prevrtanja (104N), te Fn sila zupčanika. Kada se odabere tip prstena, potrebno je zasebno izračunati statičko stanje okretnog prstena, Fa, M, Fr i dinamičke uvjete sila Fa, M, Fr.

Koeficijent sigurnosti stolno-okretnog prstena

Table-Slewing ring safety coefficient

Application of the host **Primjena**			**Tip prstena /** The type of slewing ring					
			Q, 01		02		J. 11:S.13	
			Sigurnosni koeficijent / Safety coefficient					
			fs	fd	fs	fd	fs	fd
Toranjski kran za konstrukciju / Tower crane for construction	Upper type of slewing **/ Gornji tip zakretanja**	Mf≤ 0.5M	1.25	1. 36	1. 25	1. 00	1.25	1. 00
		0.5M <Mf <0.8M		1. 55		1. 15		1. 13
		Mf ≥ 0.8M		1. 71		1. 26		1. 23
	Under type of slewing **/ Donji tip zakretanja**			1. 36		1. 00		1.07
Wheel crane, stacker-reclaimer and all kinds of the workbench **/ Dizalica na kotačima, slagač, razl. vrste radnih stolova**			1. 10		1. 10	1. 10	1. 10	1. 00
Cantilever crane, port crane, all kinds of loading and unloading machinery **/ Konzolna i lučka dizalica, razl. vrste mašinerije za utovar i istovar**			1.25	1. 55	1. 25	1. 15	1.25	1. 13
Belt conveyor handling with tower cranes and crawler crane **/ Rukovanje toranjskim dizalicama i dizalicama gusjeničarima**				1. 71	1. 10	1. 26		1. 23
Grab and shovel excavator, dredger, floating crane **/ Bageri, bagerske grabilice, plutajuća dizalica**			1. 45	2. 50	1. 45	1. 71		1. 62
Excavators of bucket capacity <1. 6m³ **/ Kapacitet bagera < 1.6m3**					1. 25	1. 26	1.45	1. 45
Excavators of bucket capacity ≥ 1.6m³ **/ Kapacitet bagera >= 1.6m3**			1. 75	3.00			1. 75	
Metallurgical crane, bucket wheel excavators, tunnel boring machine **/ Metalurška dizalica, rotorni bageri, strojevi za bušenje tunela**			2.00	3.50	1. 45	1. 75		

SERIJA 20.00.C/Serie 20.00.C

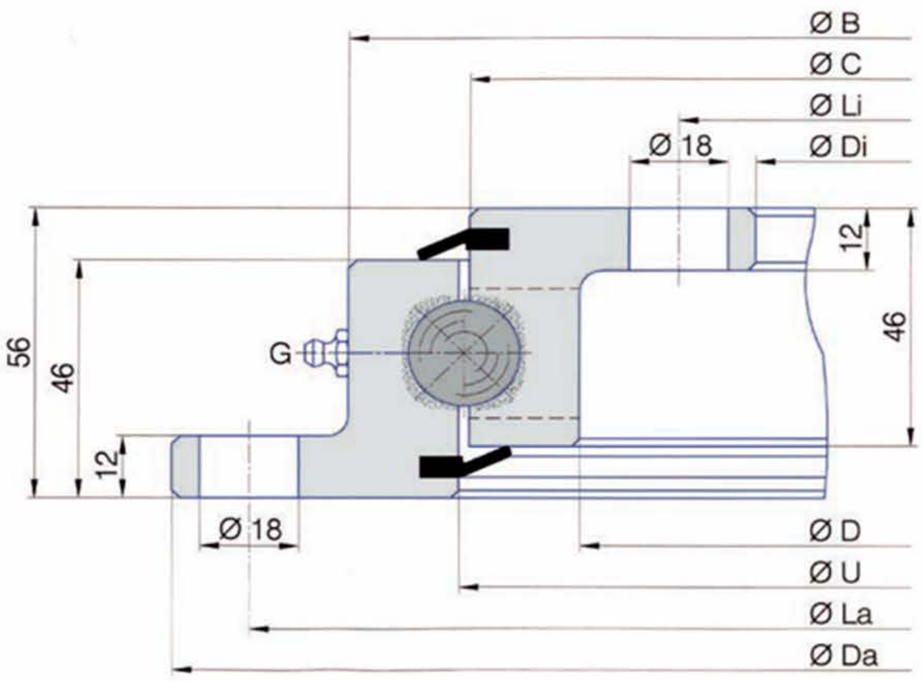

	Tip ležaja / *Bearing type*	Dimenzije / *Dimensions*						Rupe za pričvršćivanje/ *fixing holes*				Masa / *Mass*
		Da mm	B mm	U mm	C mm	D mm	Di mm	La mm	na n°	Li mm	ni n°	Težina *Weight* Kg
1	SD.505.20.00.C	518	453	415.5	412.5	375	304	490	8	332	12	23.5
2	SD.650.20.00.C	648	583	545.5	542.5	505	434	620	10	462	14	31
3	SD.750.20.00.C	748	683	645.5	642.5	605	534	720	12	562	16	36.5
4	SD.850.20.00.C	848	783	745.5	742.5	705	634	820	12	662	16	43
5	SD.950.20.00.C	948	883	845.5	842.5	805	734	920	14	762	18	48
6	SD.1050.20.00.C	1048	983	945.5	942.5	905	834	1020	16	862	20	53
7	SD.1200.20.00.C	1198	1133	1095.5	1092.5	1055	984	1170	16	1012	20	62

G = N°4 greasenipples DIN 71412 AM 8x1 equi-spaced.

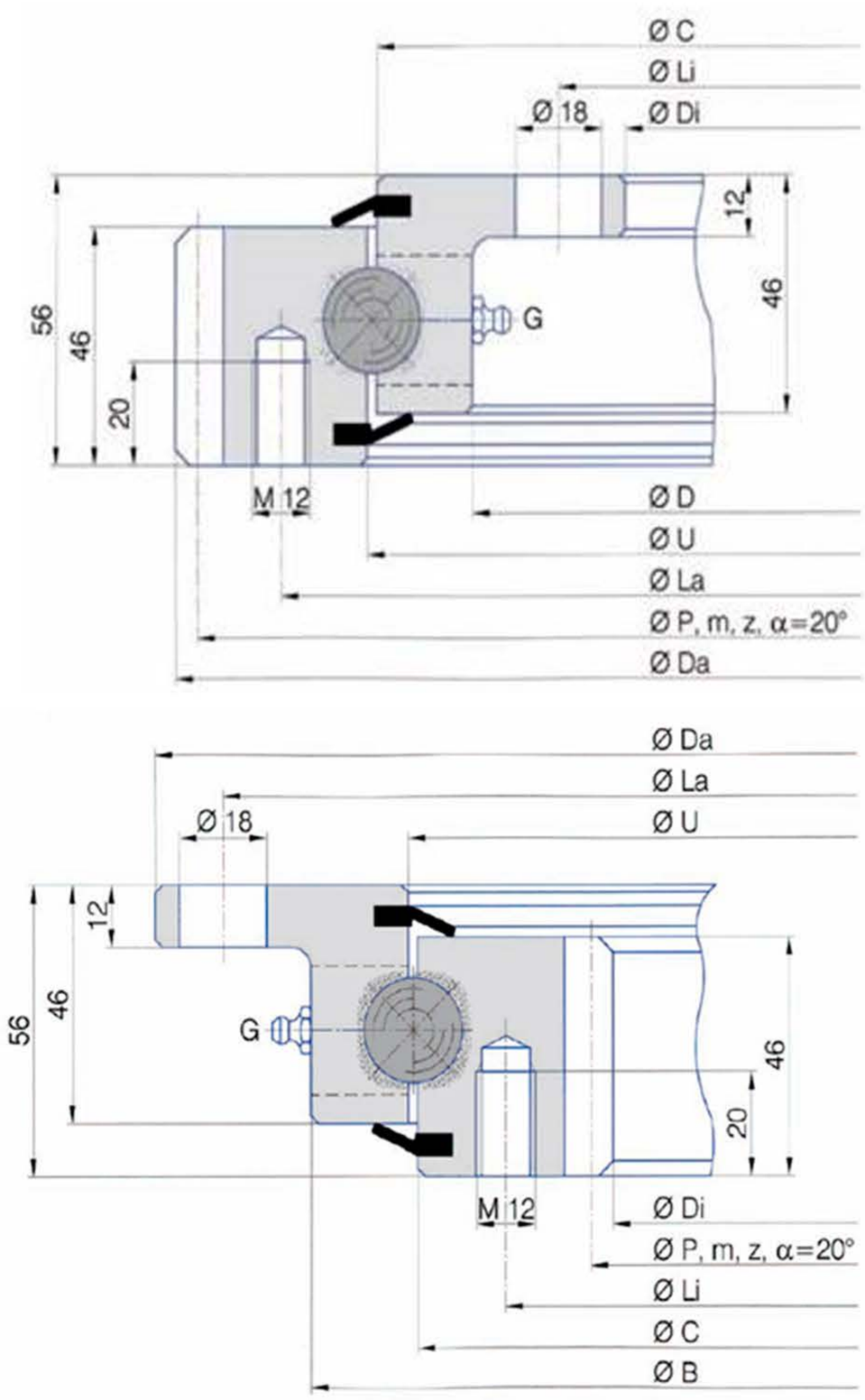

	Tip ležaja / *Bearing type*	Dimenzije / *Dimensions*					Rupe za pričvršćivanje/ *Fixing holes*				Zubi zupčanika / *Gear teeth*			Sila zuba / *Tooth force*		Masa / *Mass*
		Da mm	U mm	C mm	D mm	Di mm	La mm	na n°	Li mm	ni n°	P mm	m	z n°	Fz nor KN	Fz max KN	Težina *Weight* Kg
1	E.505.20.00.C	504	415.5	412.5	375	304	455	10	332	12	495	5	99	10.80	21.60	29
2	E.650.20.00.C	640.8	545.5	542.5	505	434	585	14	462	14	630	6	105	13.10	26.20	40
3	E.750.20.00.C	742.8	645.5	642.5	605	534	685	16	562	16	732	6	122	13.10	26.20	47
4	E.850.20.00.C	838.8	745.5	742.5	705	634	785	18	662	16	828	6	138	13.10	26.20	53
5	E.950.20.00.C	950.4	845.5	842.5	805	734	885	18	762	18	936	8	117	17.60	35.20	64
6	E.1050.20.00.C	1046.4	945.5	942.5	905	834	985	20	862	20	1032	8	129	17.60	35.20	69
7	E.1200.20.00.C	1198.4	1095.5	1092.5	1055	984	1135	22	1012	20	1184	8	148	17.60	35.20	82

G = N°4 greasenipples DIN 71412 AM 8x1 equi-spaced.

	Bearing type	*Dimensions*					*Fixing holes*				*Gear teeth*			*Tooth force*		*Mass*
		Da mm	B mm	U mm	C mm	Di mm	La mm	na n°	Li mm	ni n°	P mm	m	z n°	Fz nor KN	Fz max KN	Peso *Weight* Kg
1	I.505.20.00.C	518	453	415.5	412.5	326.5	490	8	375	12	335	5	67	11.40	22.80	27
2	I.650.20.00.C	648	583	545.5	542.5	445.2	620	10	505	16	456	6	76	13.70	27.40	37.5
3	I.750.20.00.C	748	683	645.5	642.5	547.2	720	12	605	18	558	6	93	13.70	27.40	44.5
4	I.850.20.00.C	848	783	745.5	742.5	649.2	820	12	705	20	660	6	110	13.70	27.40	51
5	I.950.20.00.C	948	883	845.5	842.5	737.6	920	14	805	20	752	8	94	18.30	36.60	61
6	I.1050.20.00.C	1048	983	945.5	942.5	841.6	1020	16	905	22	856	8	107	18.30	36.60	65
7	I.1200.20.00.C	1198	1133	1095.5	1092.5	985.6	1170	16	1055	24	1000	8	125	18.30	36.60	80

G = N°4 greasenipples DIN 71412 AM 8x1 equi-spaced.

Moguća je serija ležajeva s centrima

IT'S POSSIBLE TO HAVE THIS SERIES OF BEARINGS WITH CENTRINGS.

Moment nagiba

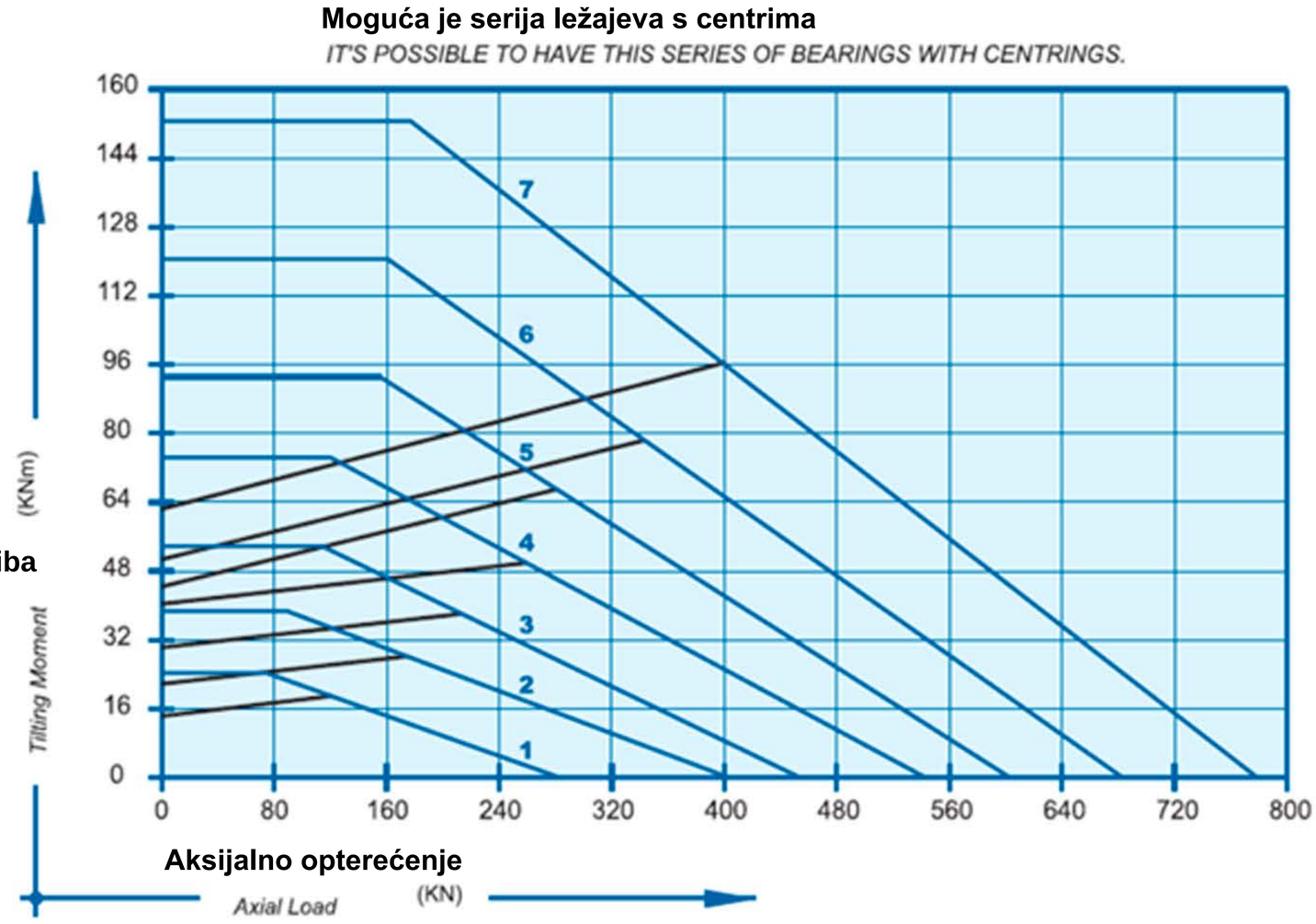

Aksijalno opterećenje

SERIJA 20.00.B/Serie 20.00.B

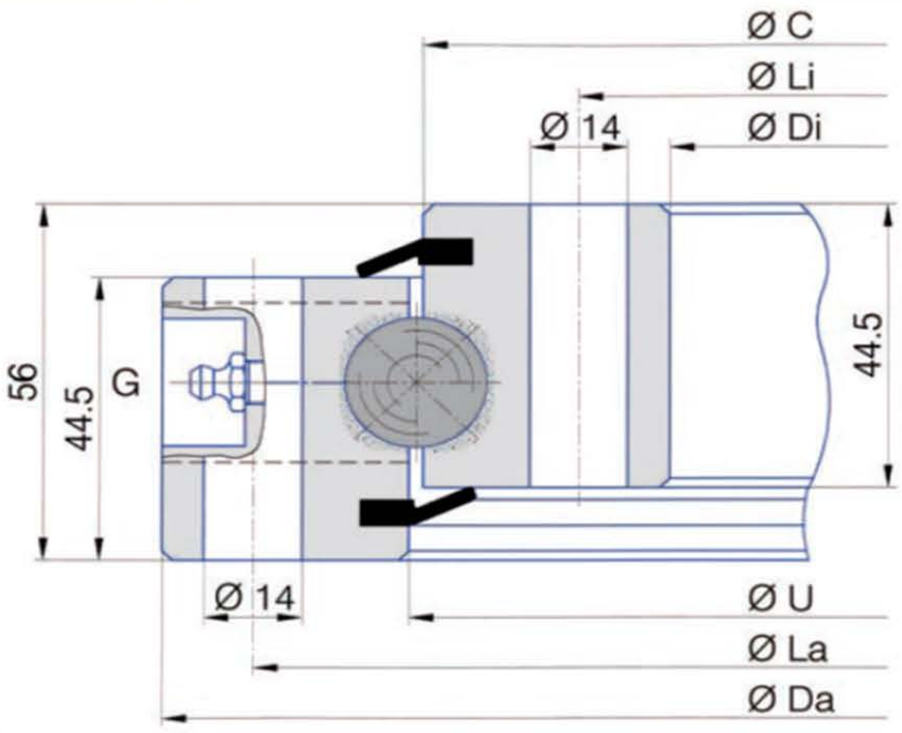

	Tip ležaja / *Bearing type*	Dimenzije / *Dimensions*				Rupa za pričvršćivanje / *Fixing holes*				Masa / *Mass*
		Da mm	U mm	C mm	Di mm	La mm	na n°	Li mm	ni n°	Težina / *Weight* Kg
1	SD.486.20.00.B	486	415.5	412.5	342	460	24	368	24	29
2	SD.616.20.00.B	616	545.5	542.5	472	590	32	498	32	37
3	SD.716.20.00.B	716	645.5	642.5	572	690	36	598	36	44
4	SD.816.20.00.B	816	745.5	742.5	672	790	40	698	40	52
5	SD.916.20.00.B	916	845.5	842.5	772	890	40	798	40	60
6	SD.1016.20.00.B	1016	945.5	942.5	872	990	44	898	44	67
7	SD.1166.20.00.B	1166	1095.5	1092.5	1022	1140	48	1048	48	77

G = N°4 greasenipples DIN 71412 AM 8x1 equi-spaced and countersunk.

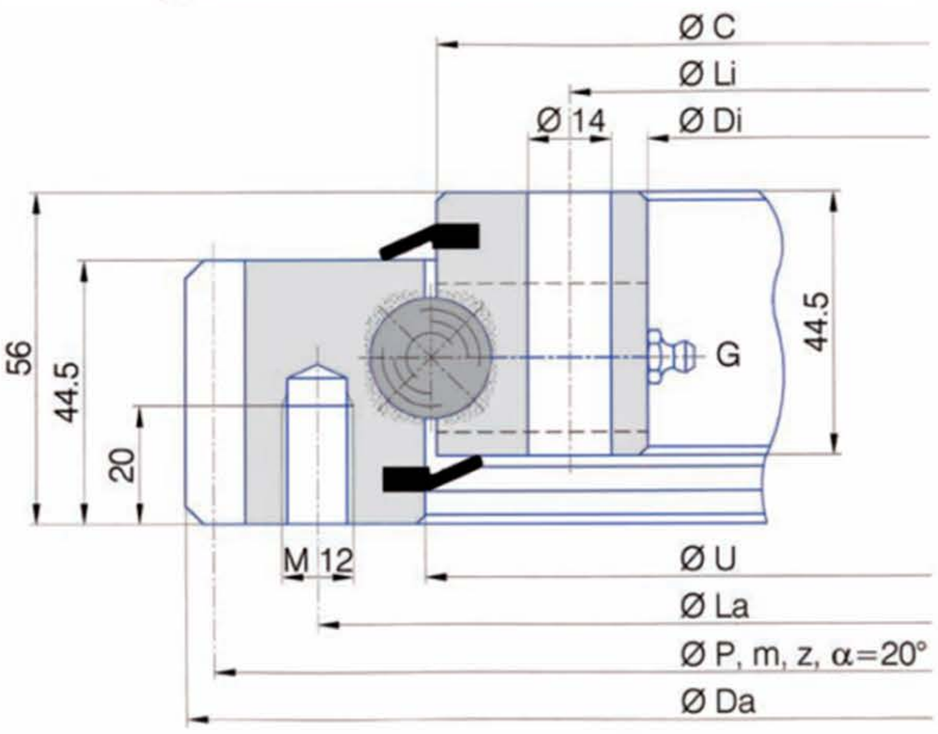

	Tip ležaja / *Bearing type*	Dimenzije / *Dimensions*				Rupa za pričvršćivanje / *Fixing holes*				Zubi zupčanika / *Gear teeth*			Sila zuba / *Tooth force*		Masa / *Mass*
		Da mm	U mm	C mm	Di mm	La mm	na n°	Li mm	ni n°	P mm	m	z n°	Fz nor KN	Fz max KN	Težina / *Weight* Kg
1	E.505.20.00.B	503.3	415.5	412.5	342	455	20	368	24	495	5	99	10.80	21.60	31
2	E.650.20.00.B	640.3	545.5	542.5	472	585	28	498	32	630	6	105	13.10	26.20	43
3	E.750.20.00.B	742.3	645.5	642.5	572	685	32	598	36	732	6	122	13.10	26.20	52
4	E.850.20.00.B	838.1	745.5	742.5	672	785	36	698	40	828	6	138	13.10	26.20	59
5	E.950.20.00.B	950.1	845.5	842.5	772	885	36	798	40	936	8	117	17.60	35.20	71
6	E.1050.20.00.B	1046.1	945.5	942.5	872	985	40	898	44	1032	8	129	17.60	35.20	77
7	E.1200.20.00.B	1198.1	1095.5	1092.5	1022	1135	44	1048	48	1184	8	148	17.60	35.20	91

G = N°4 greasenipples DIN 71412 AM 8x1 equi-spaced.

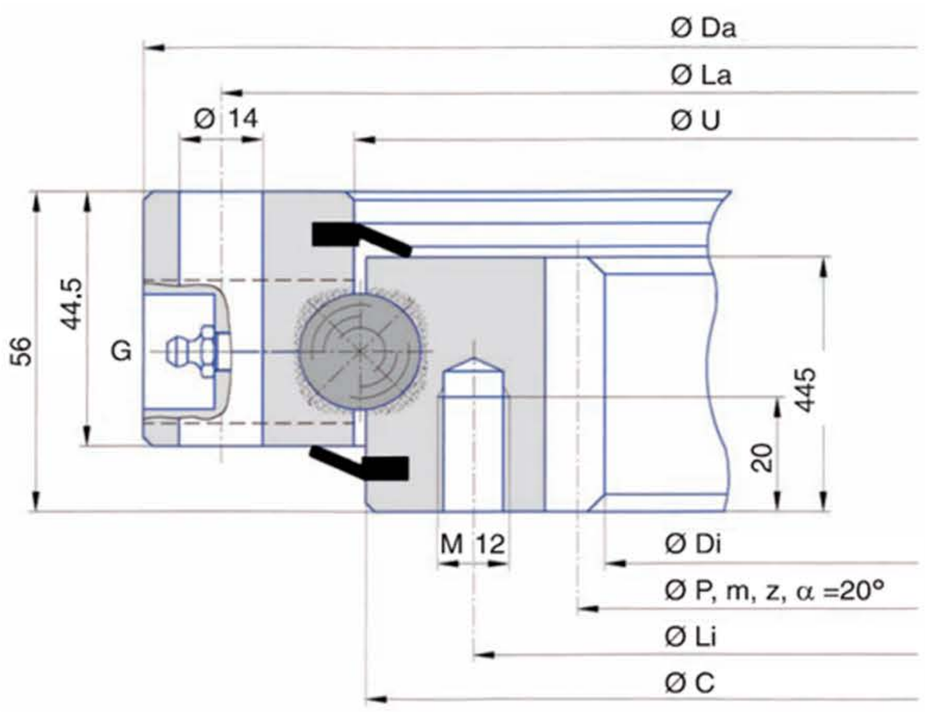

	Tip ležaja / *Bearing type*	Dimenzije / *Dimensions*				Rupa za pričvršćivanje / *Fixing holes*				Zubi zupčanika / *Gear teeth*			Sila zuba / *Tooth force*		Masa / *Mass*
		Da mm	U mm	C mm	Di mm	La mm	na n°	Li mm	ni n°	P mm	m	z n°	Fz nor KN	Fz max KN	Težina / *Weight* Kg
1	I.486.20.00.B	486	415.5	412.5	325	460	24	375	24	335	5	67	11.40	22.80	31
2	I.616.20.00.B	616	545.5	542.5	444	590	32	505	32	456	6	76	13.70	27.40	42
3	I.716.20.00.B	716	645.5	642.5	546	690	36	605	36	558	6	93	13.70	27.40	50
4	I.816.20.00.B	816	745.5	742.5	648	790	40	705	40	660	6	110	13.70	27.40	58
5	I.916.20.00.B	916	845.5	842.5	736	890	40	805	40	752	8	94	18.30	36.60	69
6	I.1016.20.00.B	1016	945.5	942.5	840	990	44	905	44	856	8	107	18.30	36.60	76
7	I.1166.20.00.B	1166	1095.5	1092.5	984	1140	48	1055	48	1000	8	125	18.30	36.60	91

G= N°4 greasenipples DIN 71412 AM 8x1 equi-spaced and countersunk.

Moguća je i serija ležajeva s centrima

IT'S POSSIBLE TO HAVE THIS SERIES OF BEARINGS WITH CENTRINGS.

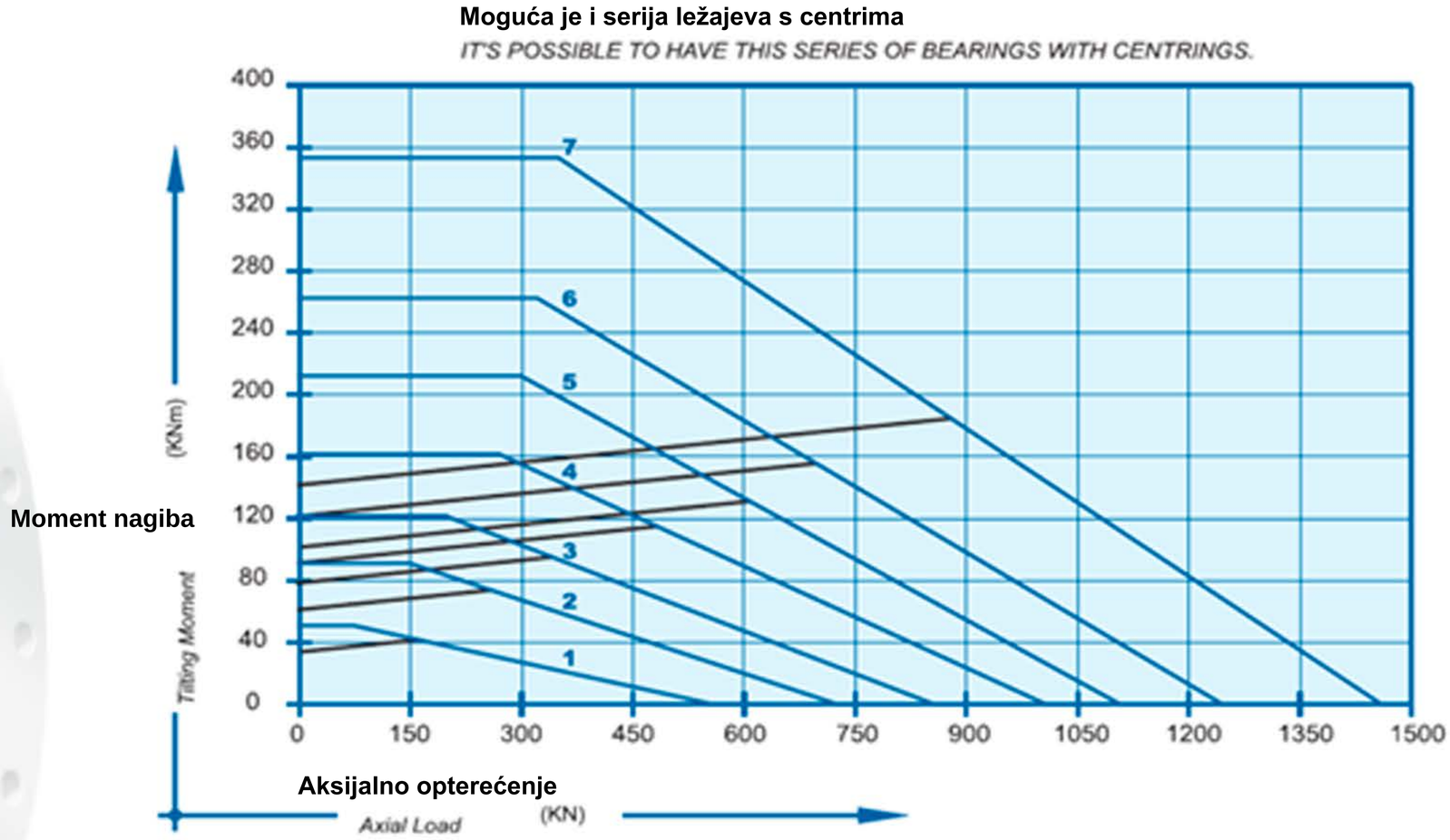

SERIJA 25.00.B / Serie 25.00.B

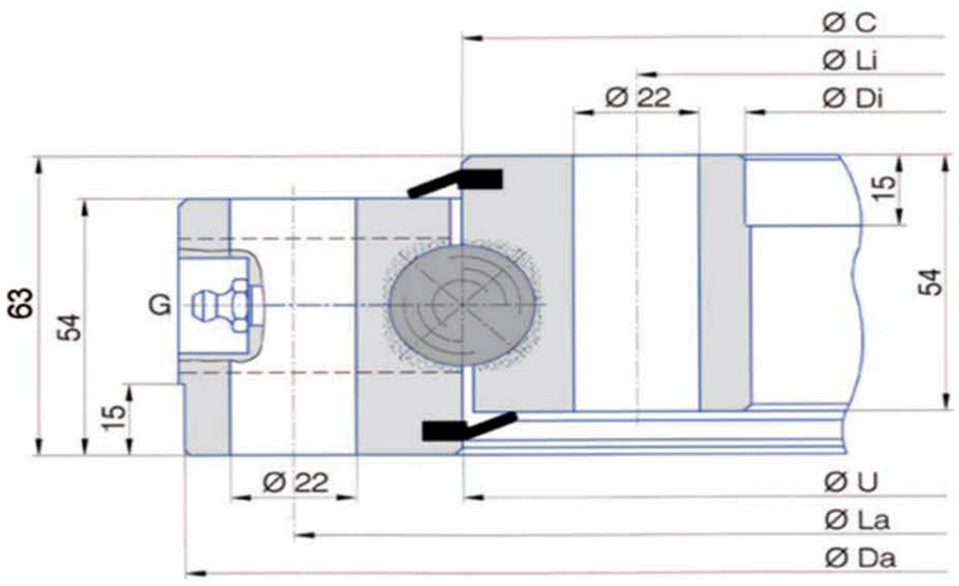

	Tip ležaja / *Bearing type*	Dimenzije / *Dimensions*				Rupe za pričvršćivanje / *Fixing holes*				Masa / *Mass*
		Da mm	U mm	C mm	Di mm	La mm	na n°	Li mm	ni n°	Težina / *Weight* Kg
1	SD.855.25.00.B	853	756	756	657	815	24	695	24	90
2	SD.955.25.00.B	953	856	856	757	915	28	795	28	101
3	SD.1055.25.00.B	1053	956	956	857	1015	30	895	30	115
4	SD.1155.25.00.B	1153	1056	1056	957	1115	30	995	30	128

G = N°4 greasenipples DIN 71412 AM 10x1 equi-spaced and countersunk.

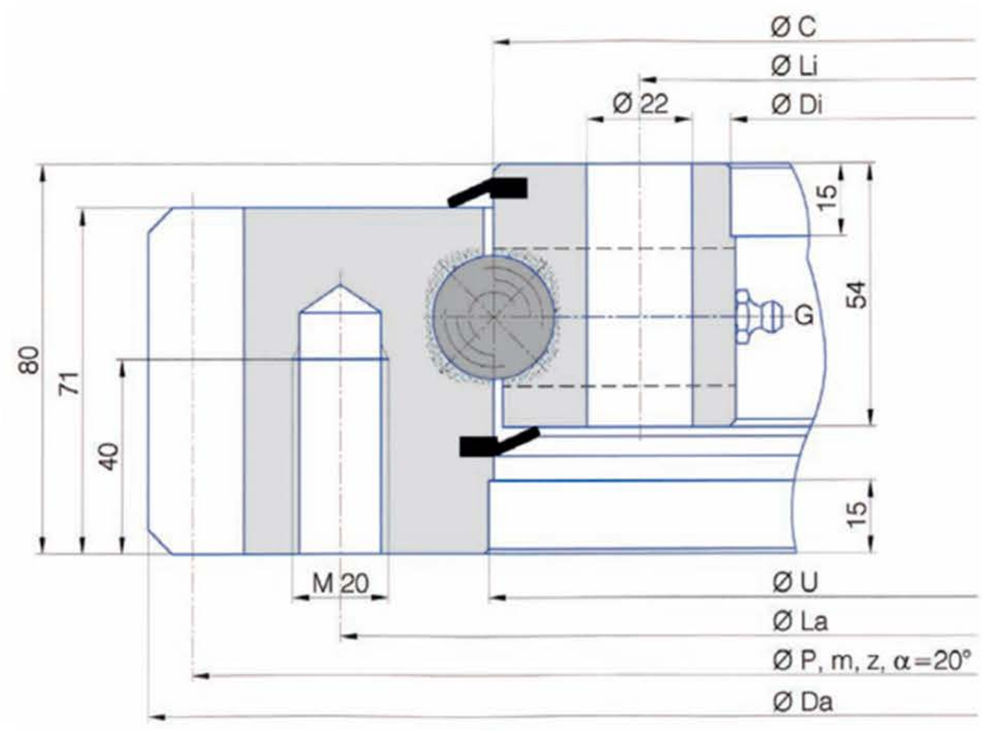

	Tip ležaja / *Bearing type*	Dimenzije / *Dimensions*				Rupe za pričvršćivanje / *Fixing holes*				Zubi zupčanika / *Gear teeth*			Sila zuba / *Tooth force*		Masa / *Mass*
		Da mm	U +IT8 mm	C mm	Di +IT8 mm	La mm	na n°	Li mm	ni n°	P mm	m	z n°	Fz nor KN	Fz max KN	Težina / *Weight* Kg
1	E.900.25.00.B	898	755	754	657	816	24	695	24	882	9	98	34.10	68.20	128
2	E.1000.25.00.B	997	855	854	757	916	28	795	28	981	9	109	34.10	68.20	145
3	E.1100.25.00.B	1096	955	954	857	1016	30	895	30	1080	9	120	34.10	68.20	155
4	E.1200.25.00.B	1198	1055	1054	957	1116	30	995	30	1180	10	118	37.85	75.70	171

G = N°4 greasenipples DIN 71412 AM 10x1 equi-spaced.

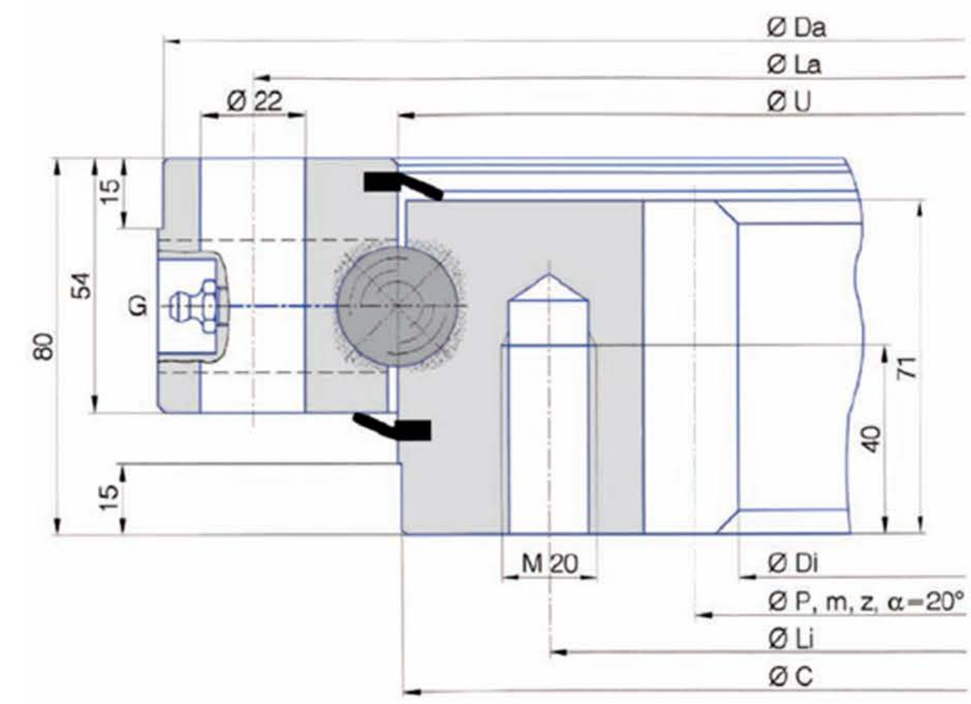

	Tip ležaja / *Bearing type*	Dimenzije / *Dimensions*				Rupe za pričvršćivanje / *Fixing holes*				Zubi zupčanika / *Gear teeth*			Sila zuba / *Tooth force*		Masa / *Mass*
		Da -IT8 mm	U mm	C -IT8 mm	Di mm	La mm	na n°	Li mm	ni n°	P mm	m	z n°	Fz nor KN	Fz max KN	Težina / *Weight* Kg
1	I.855.25.00.B	853	756	755	610	815	24	694	24	630	10	63	42.10	84.20	119
2	I.955.25.00.B	953	856	855	710	915	28	794	28	730	10	73	42.10	84.20	137
3	I.1055.25.00.B	1053	956	955	810	1015	30	894	30	830	10	83	42.10	84.20	149
4	I.1155.25.00.B	1153	1056	1055	910	1115	30	994	30	930	10	93	42.10	84.20	165

G = N°4 greasenipples DIN 71412 AM 10x1 equi-spaced and countersunk.

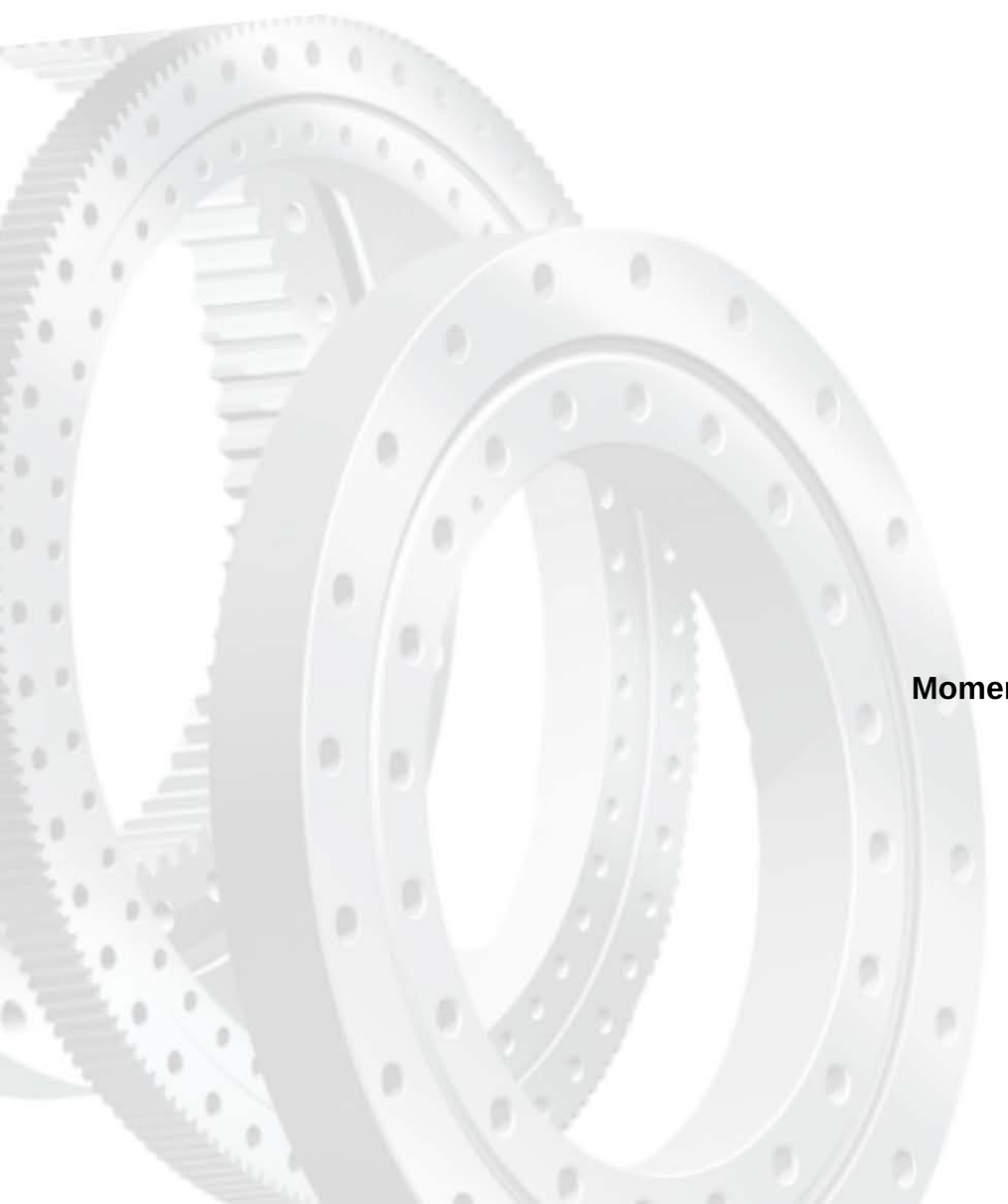

Moment nagiba

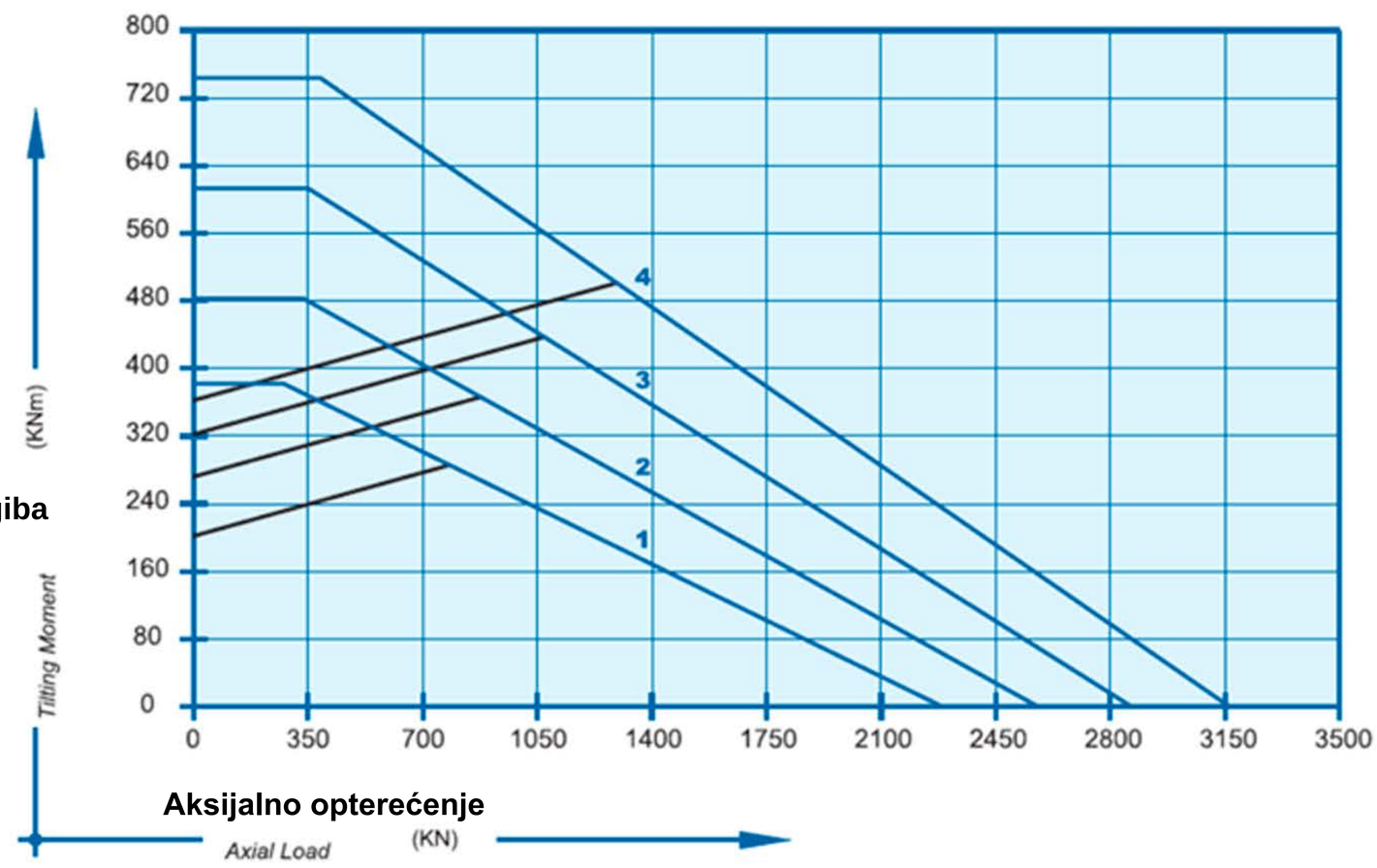

Aksijalno opterećenje

SERIJA 32.00.C / Serie 32.00.C

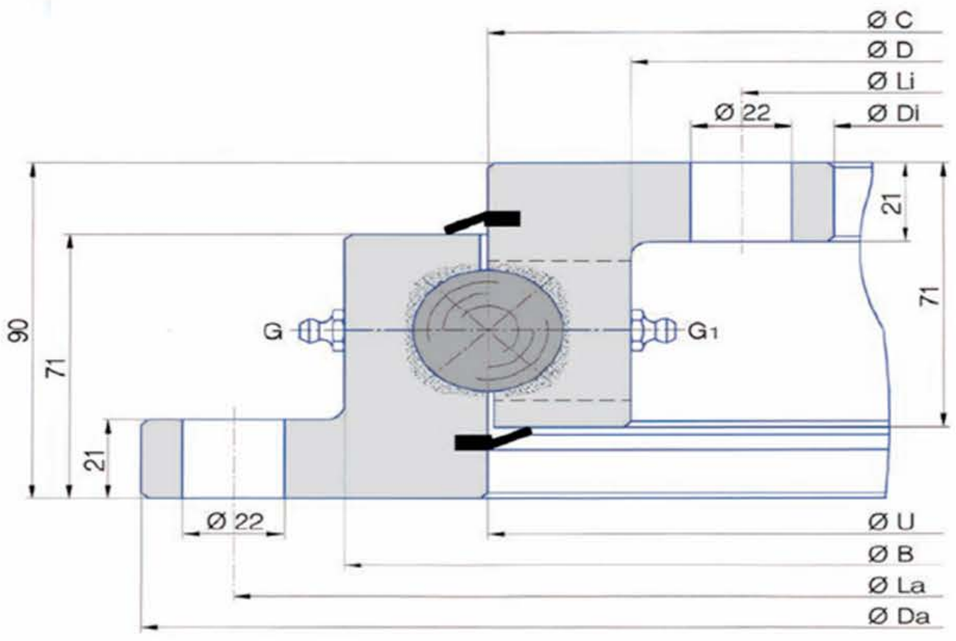

	Tip ležaja / *Bearing type*	Dimenzije / *Dimensions*						Rupe za pričvršćivanje / *Fixing holes*				Masa / *Mass*
		Da mm	B mm	U mm	C mm	D mm	Di mm	La mm	na n°	Li mm	ni n°	Težina / *Weight* Kg
1	SD.1100.32.00.C	1100	1017	955	955	893	805	1060	30	845	30	131
2	SD.1200.32.00.C	1200	1117	1055	1055	993	905	1160	30	945	30	145
3	SD.1300.32.00.C	1300	1217	1155	1155	1093	1005	1260	36	1045	36	159
4	SD.1400.32.00.C	1400	1317	1255	1255	1193	1105	1360	42	1145	42	172
5	SD.1500.32.00.C	1500	1417	1355	1355	1293	1205	1460	42	1245	42	186
6	SD.1600.32.00.C	1600	1517	1455	1455	1393	1305	1560	48	1345	48	200

G, G1 = N°6 greasenipples DIN 71412 AM 10x1 equi-spaced.

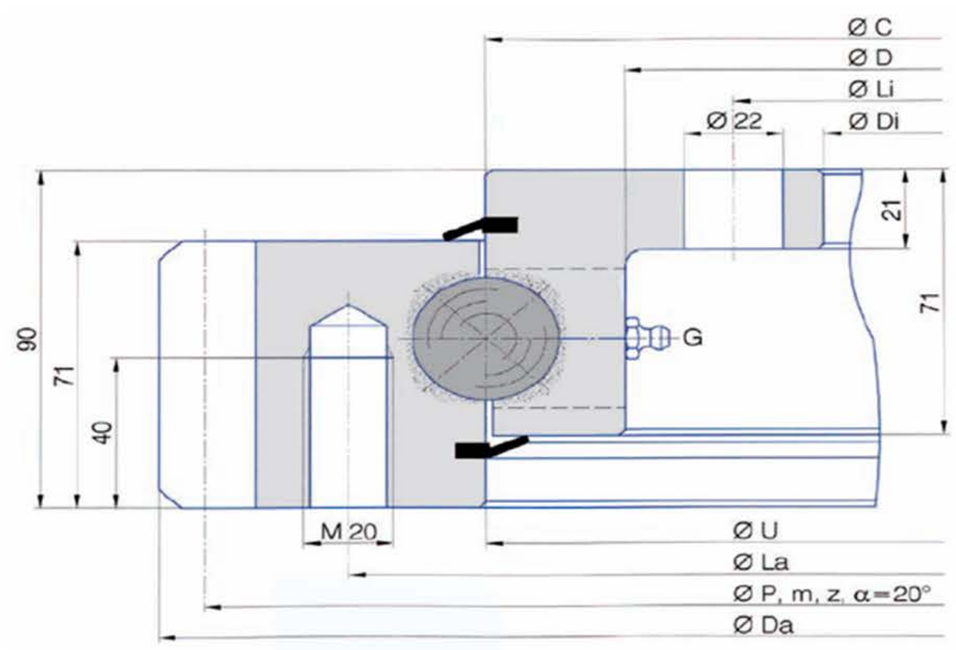

	Tip ležaja / *Bearing type*	Dimenzije / *Dimensions*					Rupe za pričvršćivanje / *Fixing holes*				Zubi zupčanika / *Gear teeth*			Sila zuba / *Tooth force*		Masa / *Mass*
		Da mm	U mm	C mm	D mm	Di mm	La mm	na n°	Li mm	ni n°	P mm	m	z n°	Fz nor KN	Fz max KN	Težina / *Weight* Kg
1	E.1100.32.00.C	1098	955	955	893	805	1016	30	845	30	1080	9	120	34.10	68.20	165
2	E.1200.32.00.C	1200	1055	1055	993	905	1116	30	945	30	1180	10	118	37.85	75.70	183
3	E.1300.32.00.C	1300	1155	1155	1093	1005	1216	36	1045	36	1280	10	128	37.85	75.70	200
4	E.1400.32.00.C	1400	1255	1255	1193	1105	1316	42	1145	42	1380	10	138	37.85	75.70	216
5	E.1500.32.00.C	1500	1355	1355	1293	1205	1416	42	1245	42	1480	10	148	37.85	75.70	234
6	E.1600.32.00.C	1600	1455	1455	1393	1305	1516	48	1345	48	1580	10	158	37.85	75.70	250

G = N°6 greasenipples DIN 71412 AM 10x1 equi-spaced.

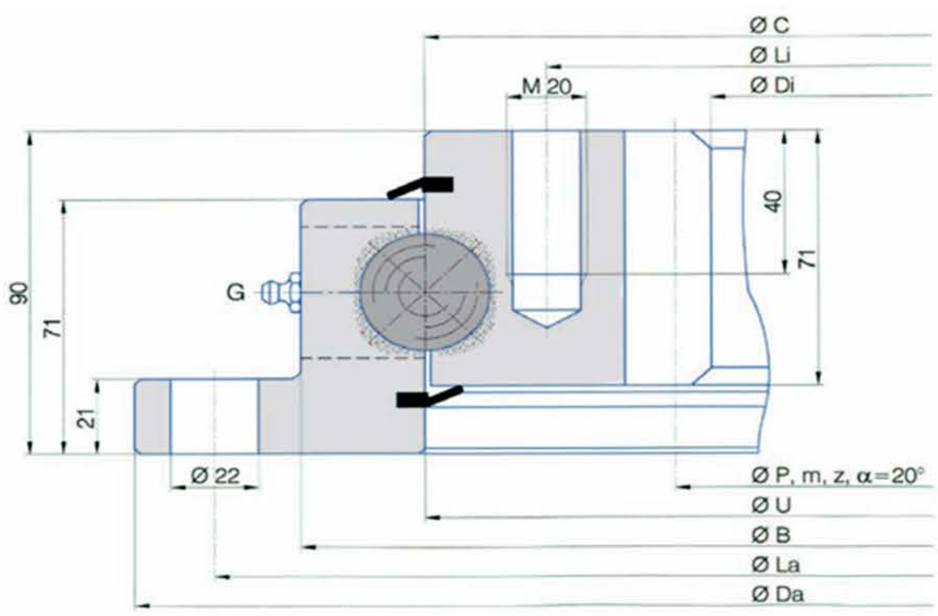

	Tip ležaja / *Bearing type*	Dimenzije / *Dimensions*					Rupe za pričvršćivanje / *Fixing holes*				Zubi zupčanika / *Gear teeth*			Sila zuba / *Tooth force*		Masa / *Mass*
		Da mm	B mm	U mm	C mm	Di mm	La mm	na n°	Li mm	ni n°	P mm	m	z n°	Fz nor KN	Fz max KN	Težina / *Weight* Kg
1	I.1100.32.00.C	1100	1017	955	955	812	1060	30	894	30	830	10	83	42.10	84.20	159
2	I.1200.32.00.C	1200	1117	1055	1055	912	1160	30	994	30	930	10	93	42.10	84.20	176
3	I.1300.32.00.C	1300	1217	1155	1155	1012	1260	36	1094	36	1030	10	103	42.10	84.20	192
4	I.1400.32.00.C	1400	1317	1255	1255	1112	1360	42	1194	42	1130	10	113	42.10	84.20	208
5	I.1500.32.00.C	1500	1417	1355	1355	1212	1460	42	1294	42	1230	10	123	42.10	84.20	226
6	I.1600.32.00.C	1600	1517	1455	1455	1310	1560	48	1394	48	1330	10	133	42.10	84.20	243

G = N°6 greasenipples DIN 71412 AM 10x1 equi-spaced.

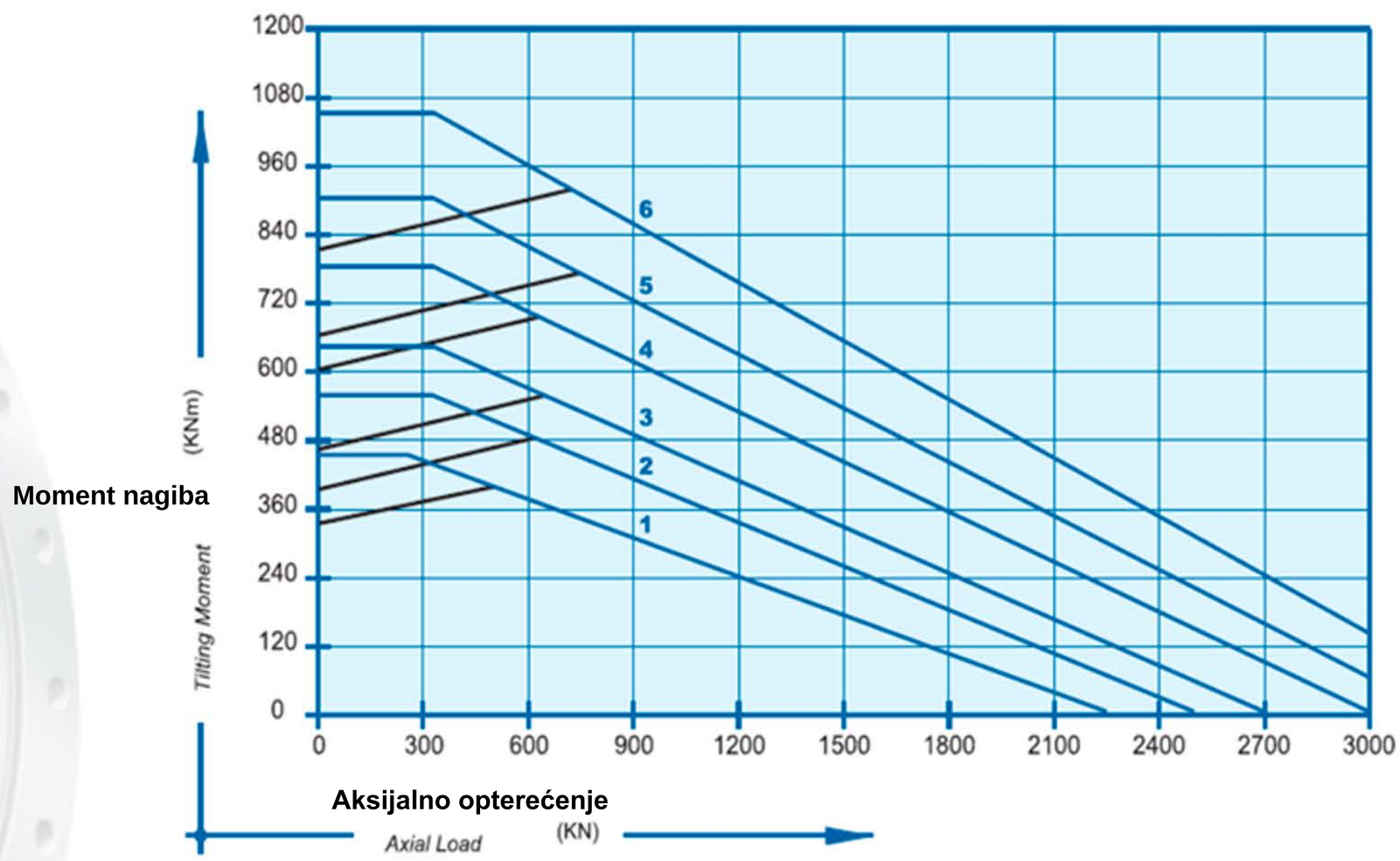

Posebni okretni prstenovi bez zubaca / Special slewing ring without teeth

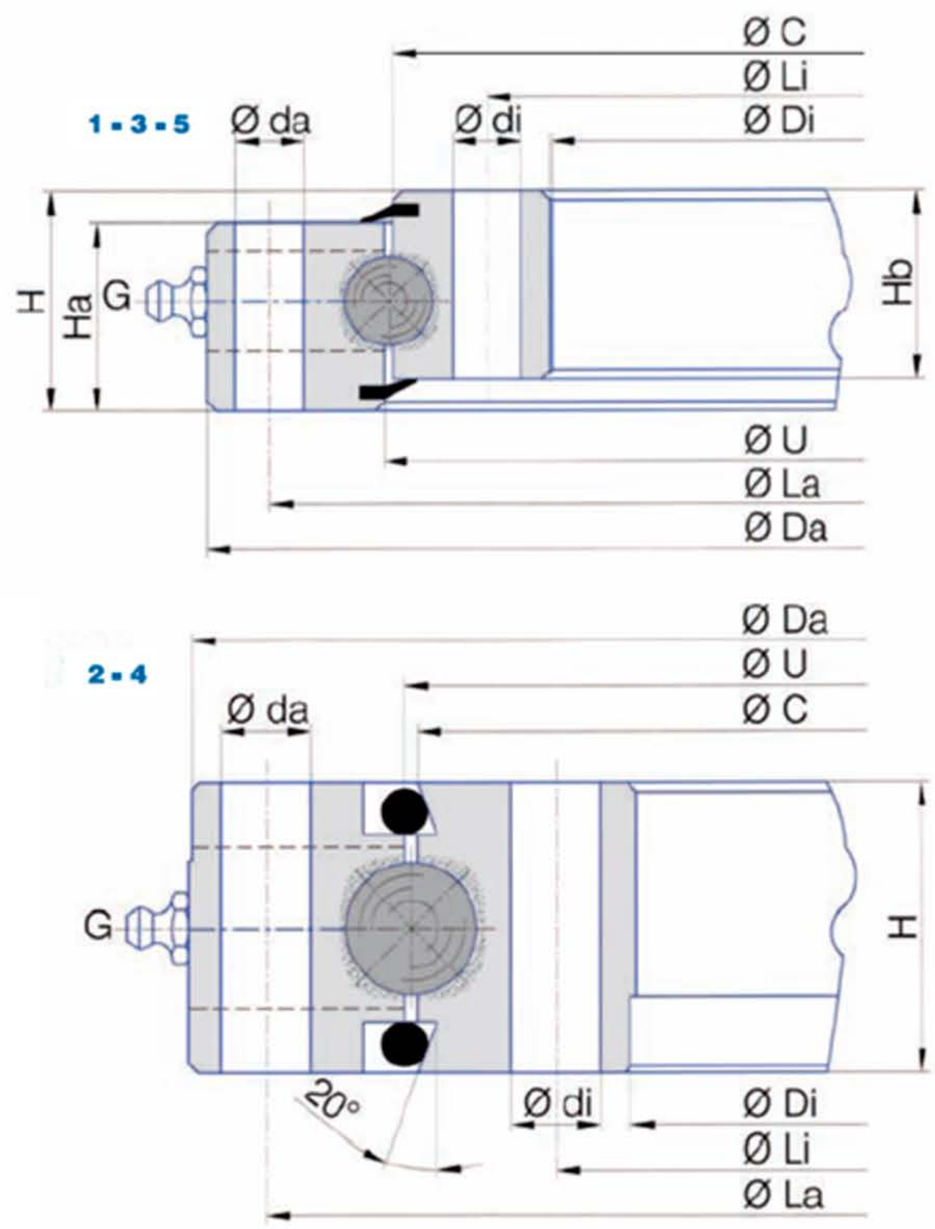

	Tip ležaja / *Bearing type*	Dimenzije / *Dimensions*							Rupe za pričvršćivanje / *Fixing holes*						Masa / *Mass*
		Da mm	U mm	C mm	Di mm	Ha mm	Hb mm	H mm	La mm	na n°	da mm	Li mm	ni n°	di mm	Težina / *Weight* Kg
1	SD.234.14.00.D.1	234	180.5	177.5	124.5	30	30	35	214	24	11	144.5	20	11	7
2	SD.329.20.00.D.1	328	262	258	192	45	45	45	305	16	14	215	16	14	18
3	SD.430.25.15.D.1	430	348	342	260	53	53	65	400	24	14	290	SC	16	32
4	SD.475.20.00.D.1	474	407	403	336	45	45	45	450	24	14	360	24	14	30
5	SD.505.25.15.D.6	505	417.5	412.5	325	64.5	60	66	475	24	17	355	24	17	48

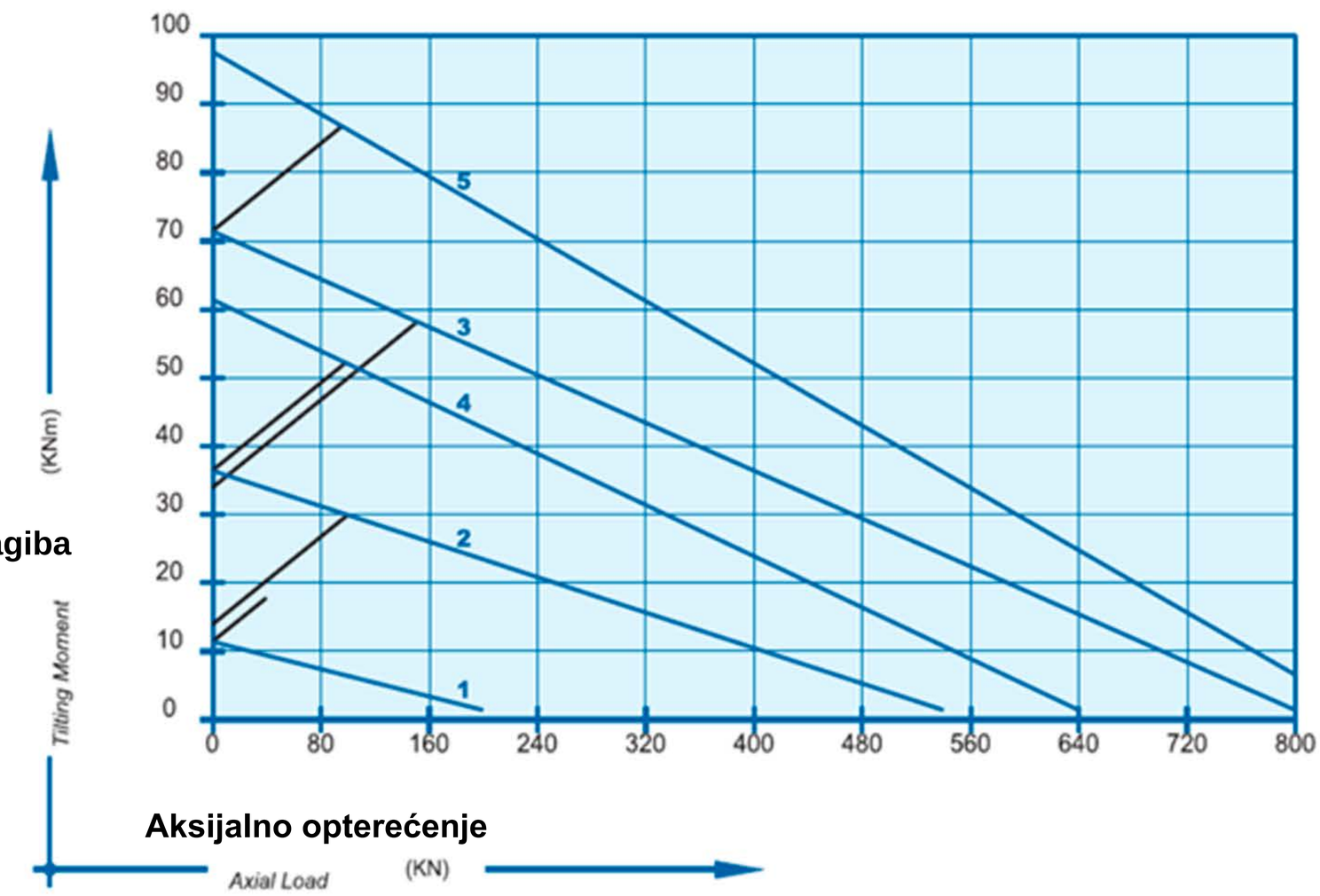

Posebni okretni prstenovi s vanjskim zupcima / Special slewing ring external teeth

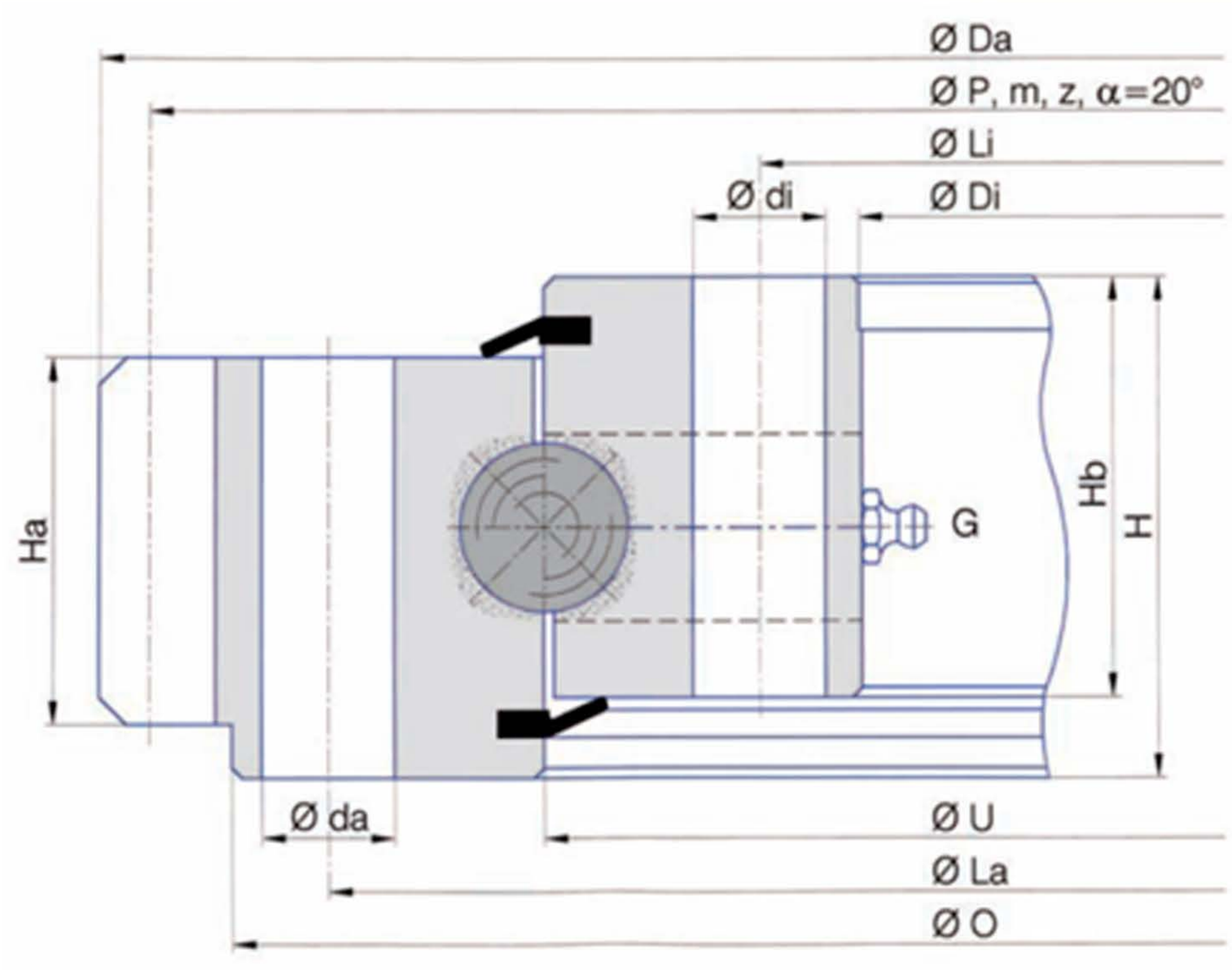

	Bearing type	Dimenzije / Dimensions							Rupe za pričvršćivanje / Fixing holes						Zubi zupčanika / Gear teeth			Sila zuba / Tooth force		Masa / Mass
		Da mm	O mm	U mm	Di mm	Ha mm	Hb mm	H mm	La mm	na n°	da mm	Li mm	ni n°	di mm	P mm	m	z n°	Fz nor KN	Fz max KN	Težina / Weight Kg
1	E.318.22.00.D.1	318	297	230	162	40	46	56	275	20	13	182	20-1	13	310.5	4.5	69	8.5	17	17
2	E.403.22.00.D.1	403.5	380	310	235	39	47	55	358	24	13	259	28-1	13	396	4.5	88	8.5	17	23

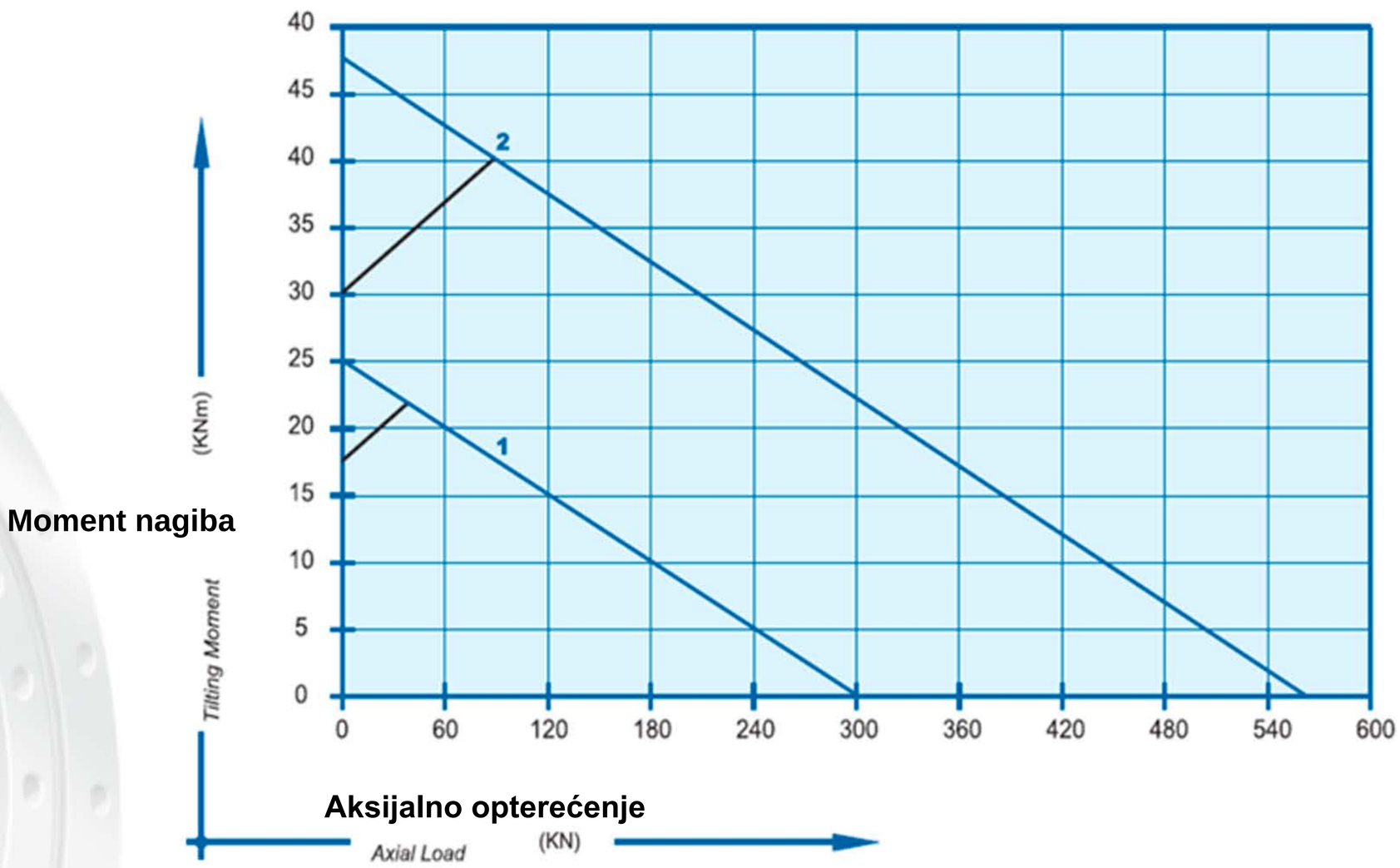

Posebni okretni prstenovi s vanjskim zupcima / Special slewing ring external teeth

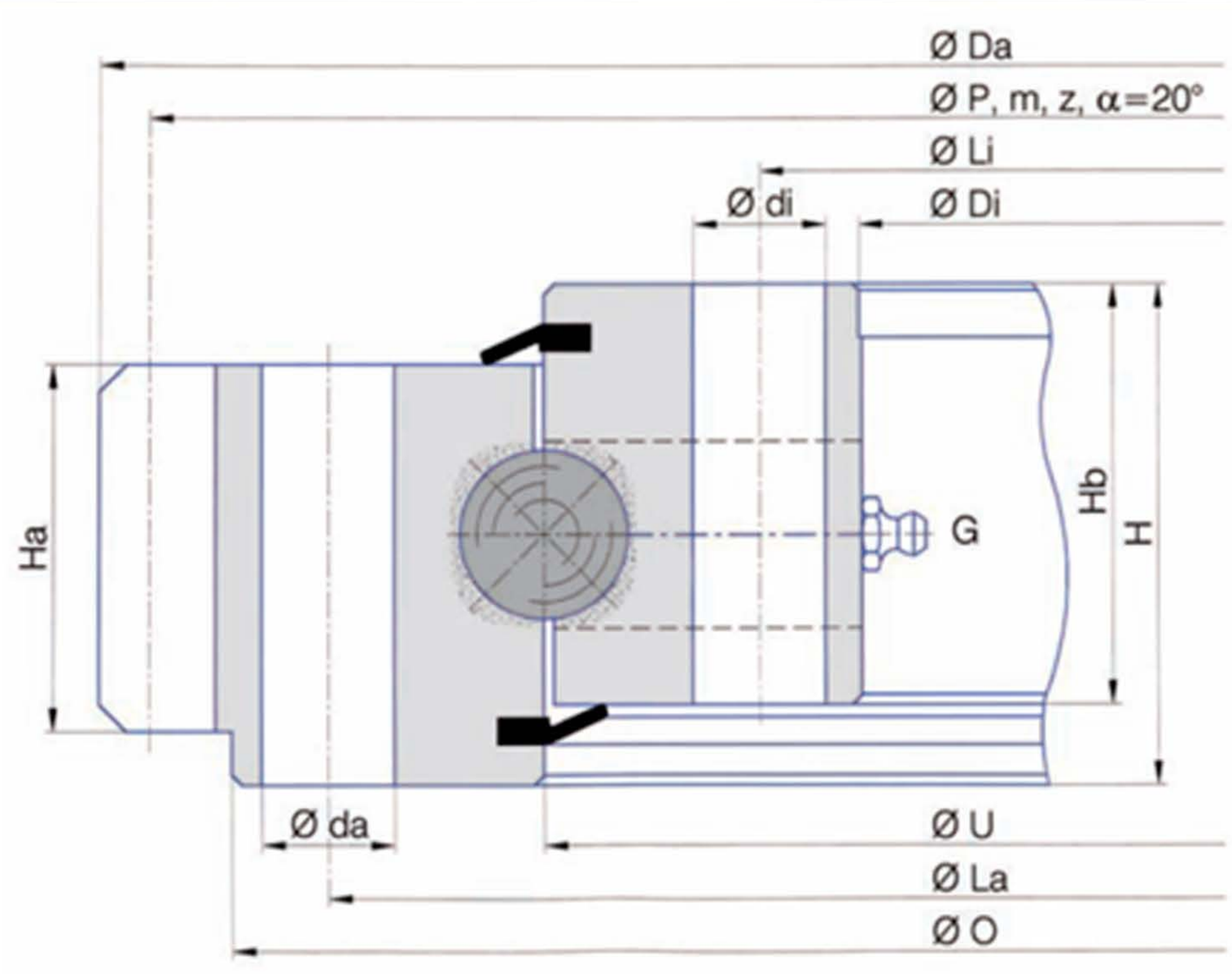

	Tip ležaja / *Bearing type*	Dimenzije / *Dimensions*							Rupe za pričvršćivanje / *Fixing holes*						Zubi zupčanika / *Gear teeth*			Sila zuba / *Tooth force*		Masa / *Mass*
		Da mm	O mm	U mm	Di mm	Ha mm	Hb mm	H mm	La mm	na n°	da mm	Li mm	ni n°	di mm	P mm	m	z n°	Fz nor KN	Fz max KN	Težina / *Weight* Kg
1	E.535.25.00.D.1	535	495	401	306	55	63	75	466	18	20	336	18	20	520	8	65	20	40	65
2	E.589.25.15.D.1	589.5	565	475	384	40	63	75	540	36	16	410	36-1	16	580.5	4.5	129	9	18	60
3	E.595.25.00.D.6	595	565	477	382	50	55	65	540	18	17	410	18	17	585	5	117	10.5	21	58
4	E.864.25.00.D.5	864	835	758	680	57	65	82	800	24	M16	706	24	M16	852	6	142	15	30	85
5	E.972.25.00.D.3	972	942	854	766	58	60	70	912	36	M16	796	36	18	960	6	160	15	30	108
6	E.1080.25.00.D.5	1080	1042	987	895	62	64	82	1015	30	M16	922	30	M16	1064	8	133	26	52	120
7	E.1200.25.00.D.1	1200	1163	1076	982	50	55	65	1135	30	18	1012	30	18	1184	8	148	20	40	140

G = For the number and the position of the greasenipples, please ask for the detailed drawing of bearing.

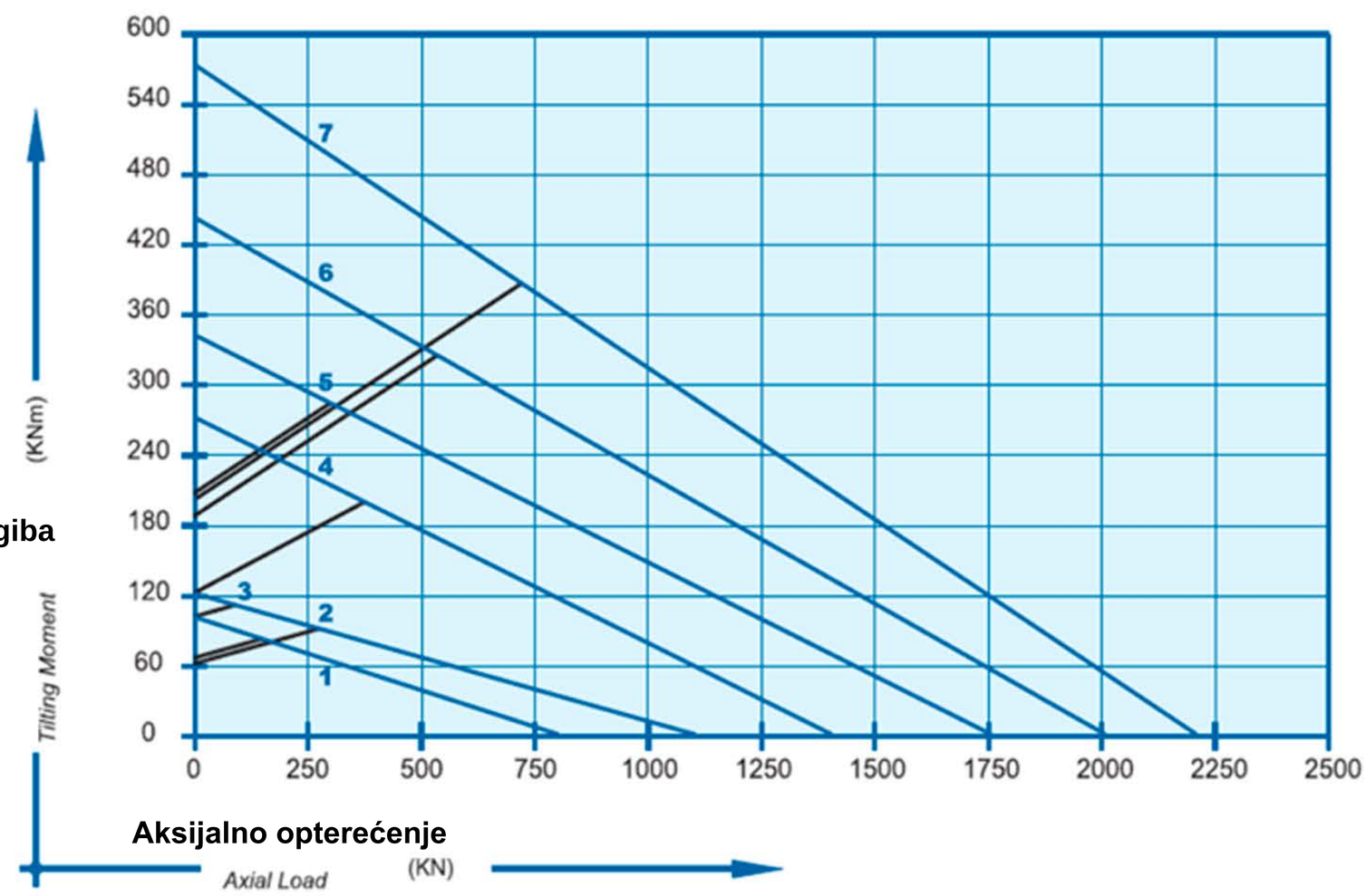

Posebni okretni prstenovi s vanjskim zupcima / Special slewing ring external teeth

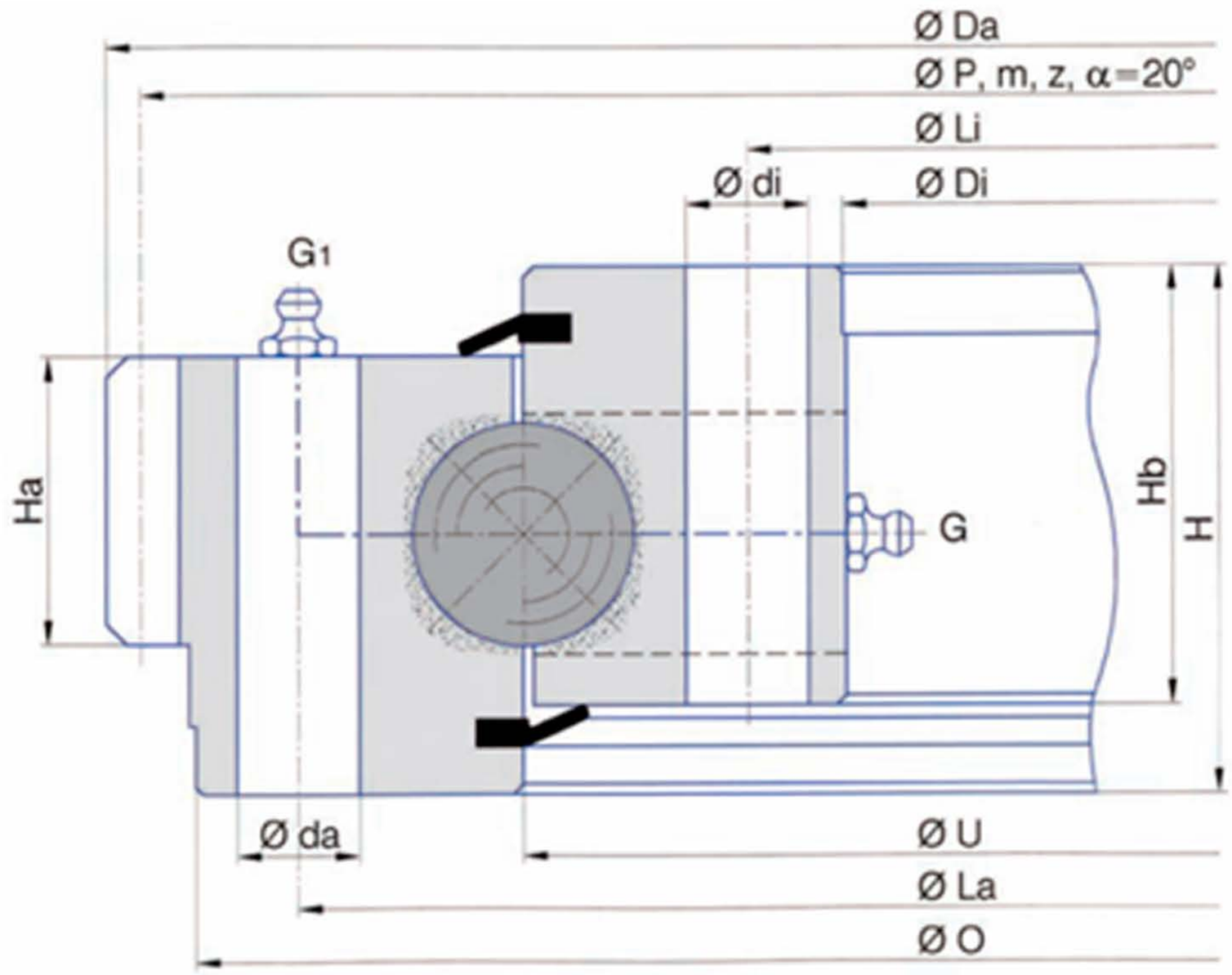

	Tip ležaja / *Bearing type*	Dimenzije / *Dimension*							Rupe za pričvršćivanje / *Fixing holes*						Zubi zupčanika / *Gear teeth*			Sila zuba / *Tooth force*		Masa / *Mass*
		Da mm	O mm	U mm	Di mm	Ha mm	Hb mm	H mm	La mm	na n°	da mm	Li mm	ni n°	di mm	P mm	m	z n°	Fz nor KN	Fz max KN	Težina / *Weight* Kg
1	E.595.32.00.D.1	595	565	475	382	65	75	88	540	24	18	410	24-1	18	585	5	117	10.5	21	80
2	E.695.32.15.D.1	695	670	574	480	42	64	77	640	36	18	508	36-1	18	685	5	137	13.5	27	77
3	E.816.32.00.D.1	816	781	682	574	65	70	90	753	18	22	604	18	22	792	6	132	17	34	120
4	E.980.32.00.D.1	979	932	845	718	65	82	100	893	36	22	753	36-1	22	940	10	94	40	80	167
5	E.1144.32.15.D.1	1144	1090	993	870	67	84	100	1050	36	22	910	36	22	1110	10	111	58	116	230
6	E.1289.32.15.D.1	1289.5	1240	1116	985	78	94	114	1198	40	22	1035	40	22	1250	10	125	68	136	330
7	E.1380.32.15.D.1	1380	1330	1212	1100	80	94	114	1290	36	22	1135	36	22	1350	10	136	55	110	350

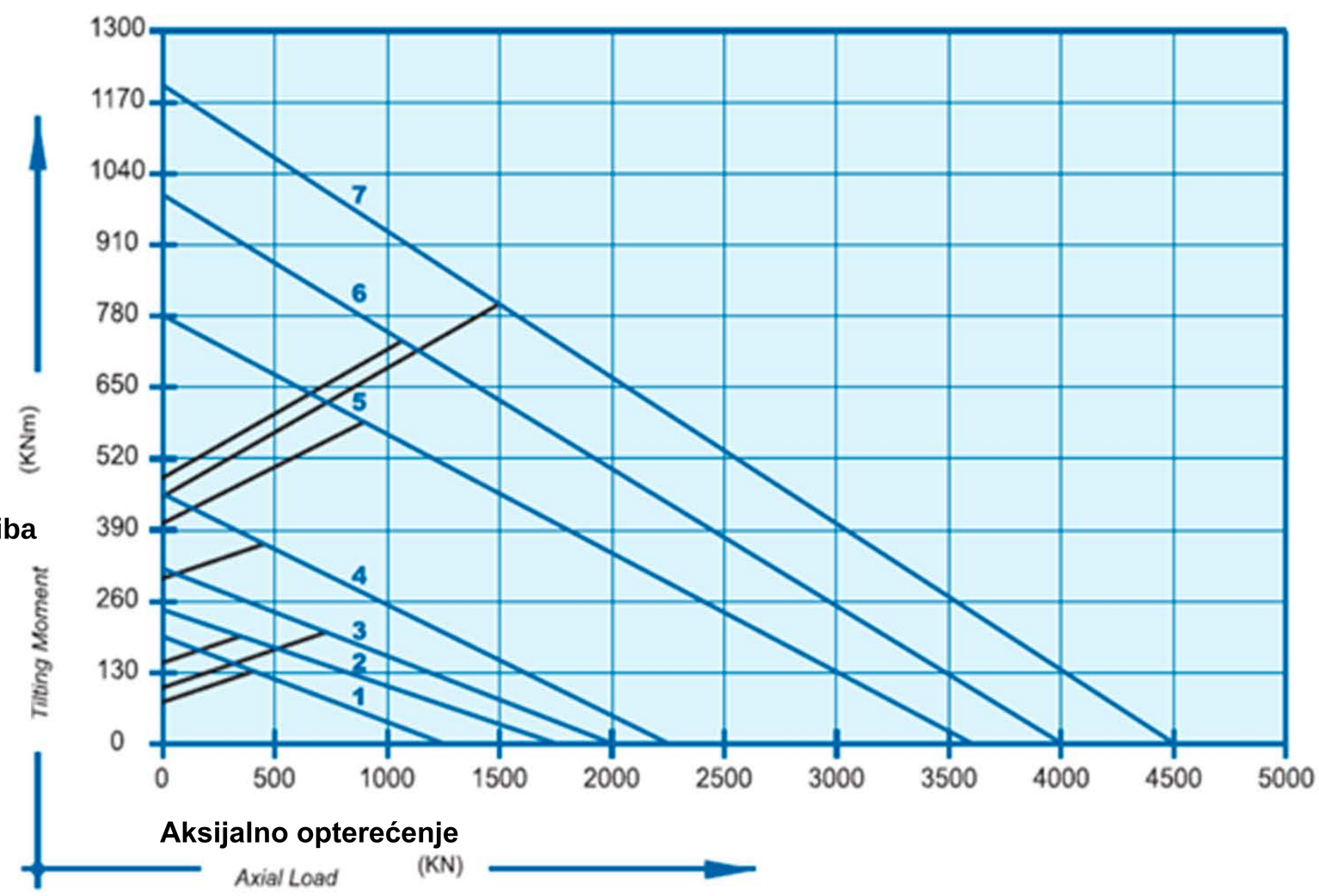

Posebni okretni prstenovi s vanjskim zupcima / Special slewing ring external teeth

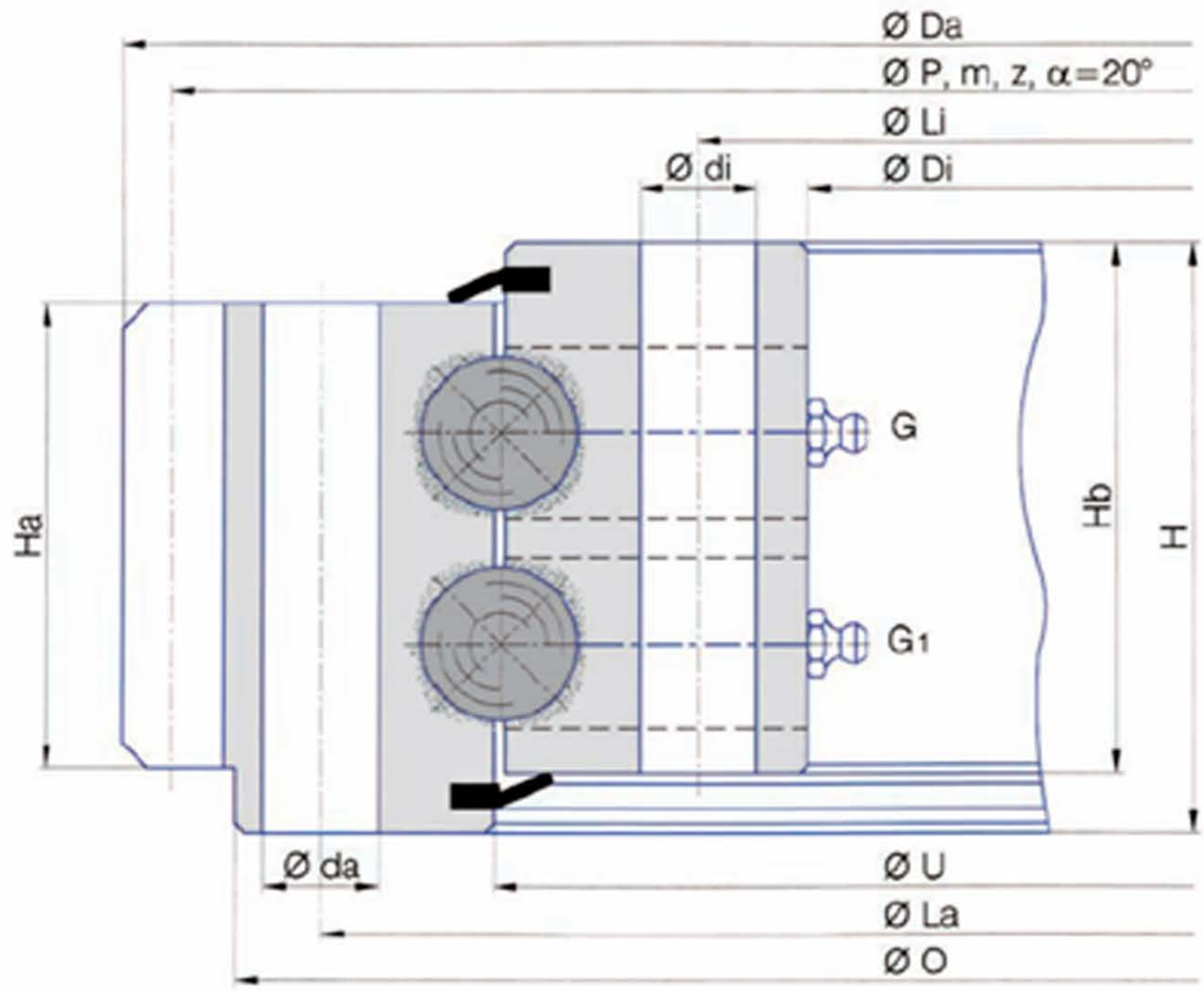

	Tip ležaja / *Bearing type*	Dimenzije / *Dimension*							Rupe za pričvršćivanje / *Fixing holes*						Zubi zupčanika / *Gear teeth*			Sila zuba / *Tooth force*		Masa / *Mass*
		Da mm	O mm	U mm	Di mm	Ha mm	Hb mm	H mm	La mm	na n°	da mm	Li mm	ni n°	di mm	P mm	m	z n°	Fz nor KN	Fz max KN	Težina / *Weight* Kg
1	E.504.2.25.00.D.6	504	466	385	300	75	87	95	436	16	17	330	16	17	488	8	61	31	62	65
2	E.608.2.25.10.D.6	608	570	477	382	75	87	95	540	24	17	410	24	17	592	8	74	40	80	84
3	E.712.2.25.12.D.6	712	670	577	470	75	88	98	640	24	17	508	24	17	696	8	87	41	82	103
4	E.1079.2.20.12.D.3-V	1079	-	972	893	70	80	90	1015	30	M16	922	30	18	1048	8	131	42	84	140
5	E.1080.2.22.00.D.6	1080	1042	970	893	76	83	92	1015	30	17	922	30	17	1064	8	133	32	64	150
6	E.1200.2.25.00.D.1	1200	1163	1079	976	77	88	98	1135	36	19	1012	36	19	1184	8	148	32	64	210

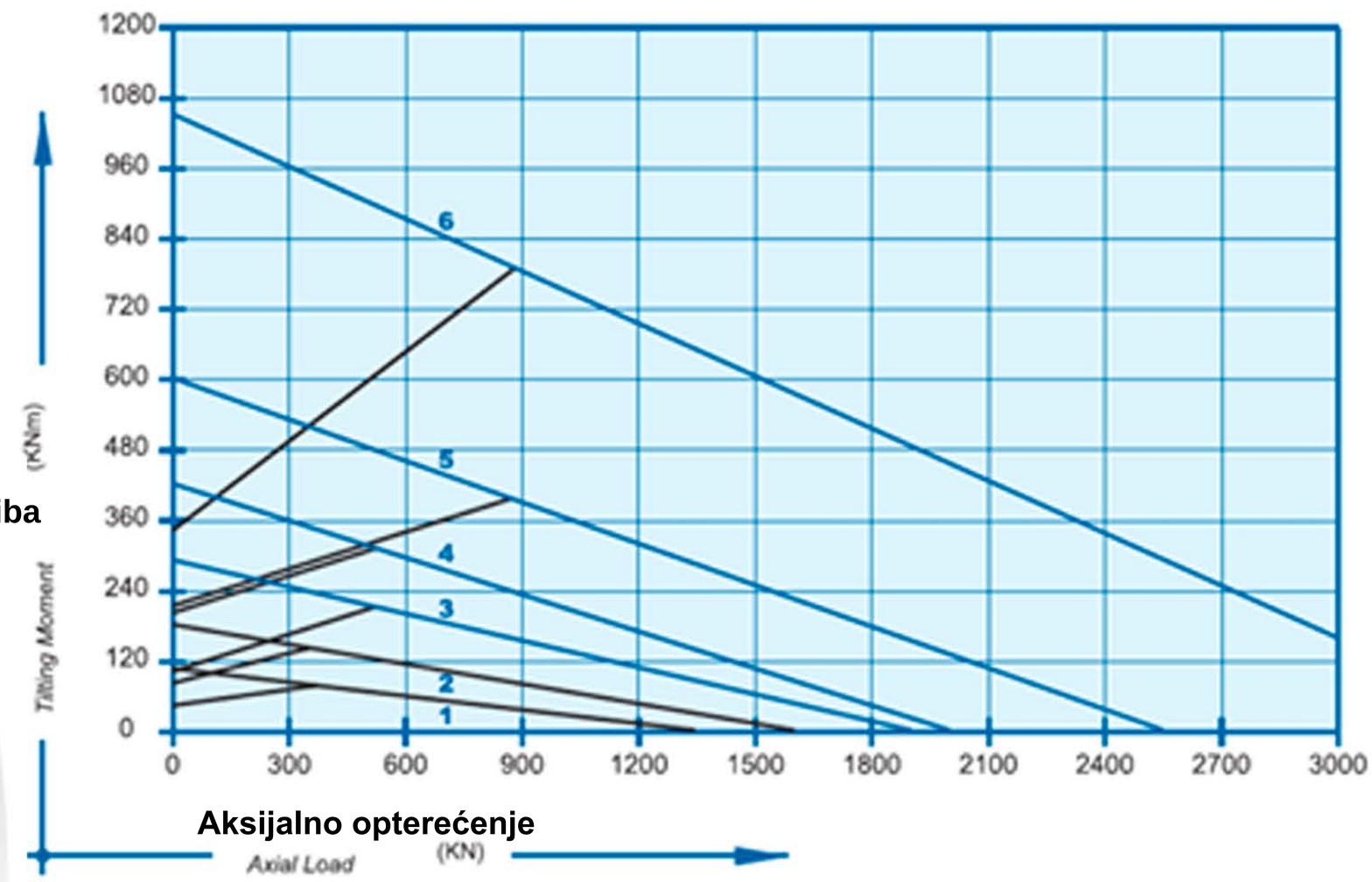

Posebni okretni prstenovi s vanjskim zupcima / Special slewing ring external teeth

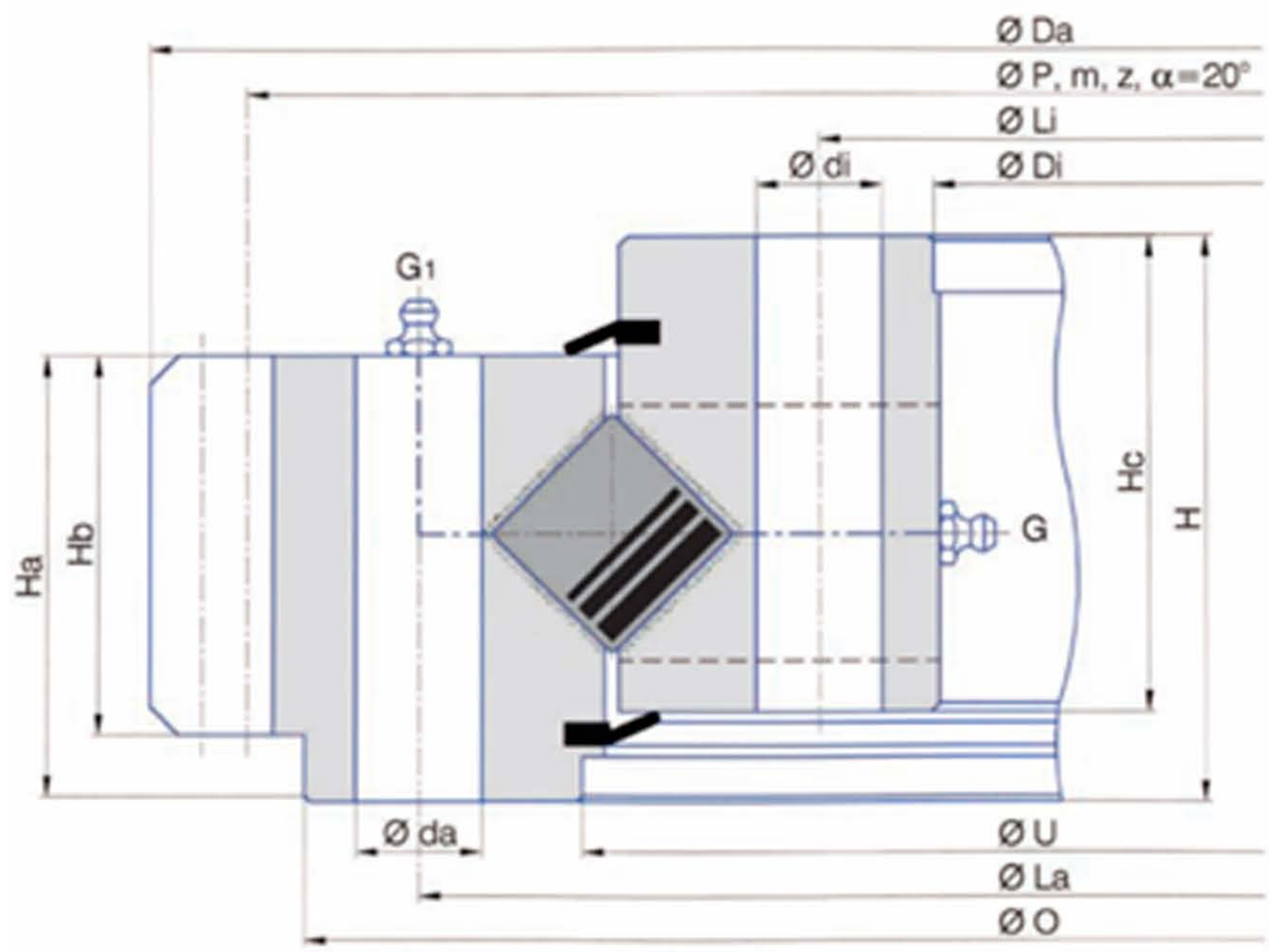

	Tip ležaja / *Bearing type*	Dimenzije / *Dimensions*							Rupe za pričvršćivanje / *Fixing holes*						Zubi zupčanika / *Gear teeth*			Sila zuba / *Tooth force*		Masa / *Mass*
		Da mm	O mm	U mm	Di mm	Ha mm	Hb mm	H mm	La mm	na n°	da mm	Li mm	ni n°	di mm	P mm	m	z n°	Fz nor KN	Fz max KN	Težina / *Weight* Kg
1	E.1144.30.12.D.1-RV	1144	1090	993	870	84	67	100	1050	18	22	910	SC	22	1110	10	111	58	116	230
2	E.1144.30.12.D.3-RV	1144	1090	993	870	84	67	100	1050	SC	22	910	SC	22	1122	11	102	60	120	230
3	E.1390.30.15.D.1-R	1390	-	1237	1115	89	85	105	1290	30	M20	1150	30	22	1368	12	114	82	164	329
4	E.1476.45.15.D.1-RV	1476	1415	1252.5	1085	100	77	110	1350	24	26	1150	28	26	1440	10	144	68	136	475
5	E.1604.50.10.D.1-RV	1604	1550	1394	1208	116	75	128	1500	24	29	1280	SC	29	1570	10	157	55	110	606
6	E.1805.45.17.D.3-R	1805	1730	1608	1437	120	115	140	1671	60	M27	1485	60	30	1744	16	109	167	334	750

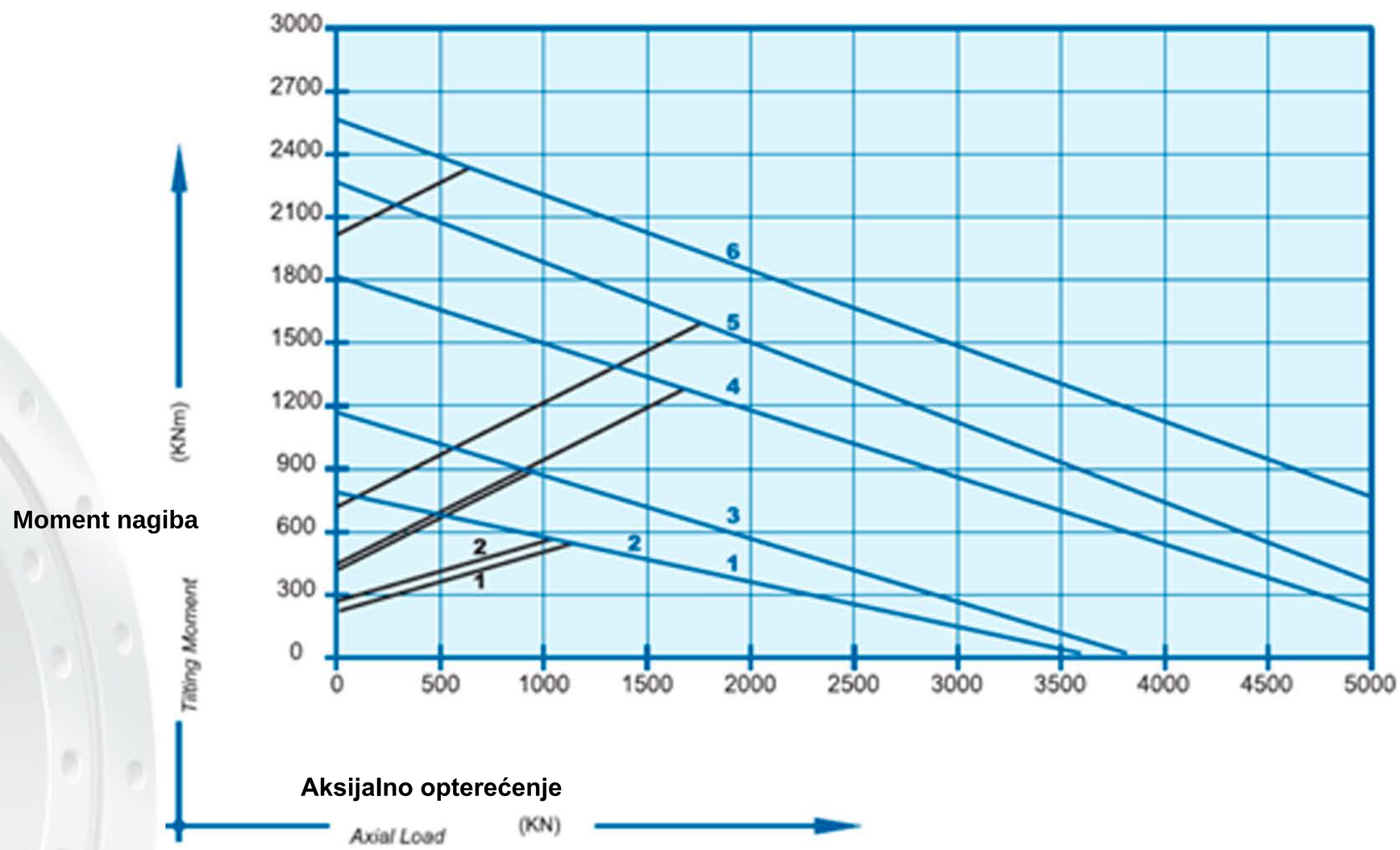

Posebni okretni prstenovi s unutarnjim zupcima / Special slewing ring internal teeth

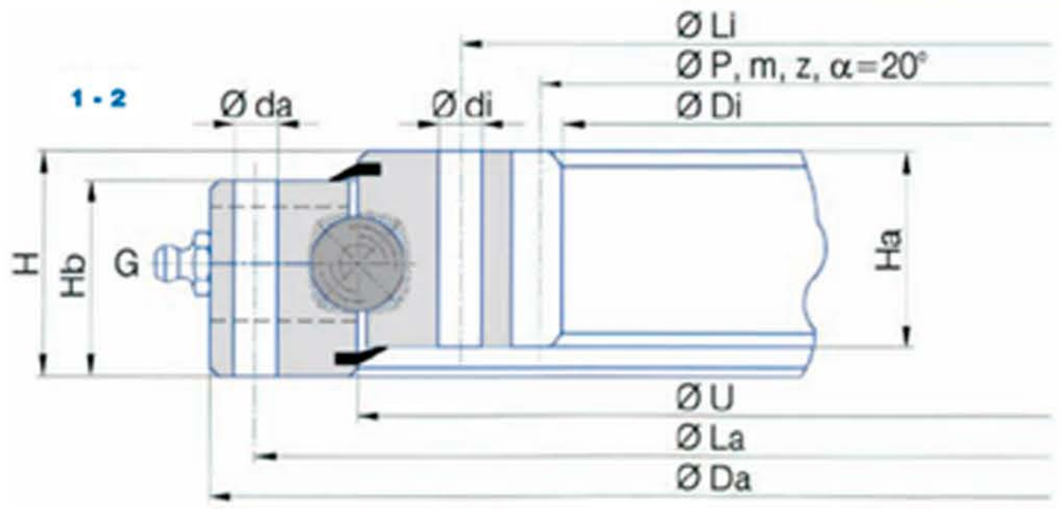

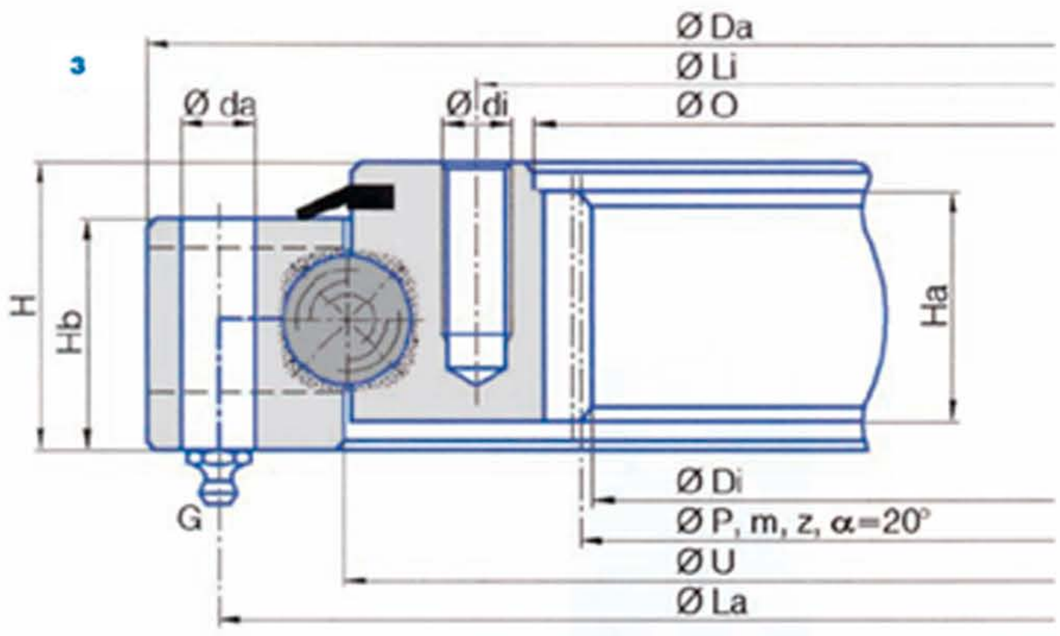

	Tip ležaja / *Bearing type*	Dimenzije / *Dimensions*							Rupe za pričvršćivanje / *Fixing holes*						Zubi zupčanika / *Gear teeth*			Sila zuba / *Tooth force*		Masa / *Mass*
		Da mm	U mm	O mm	Di mm	Ha mm	Hb mm	H mm	La mm	na n°	da mm	Li mm	ni n°	di mm	P mm	m	z n°	Fz nor KN	Fz max KN	Težina / *Weight* Kg
1	I.340.16.00.D.1	340	288	-	216	34	34	39	324	20	9	252	20	9	224	4	56	8	16	12
2	I.486.16.00.D.1	486	420	-	332	34	34	39	462	16	14	378	16	14	340	4	85	8	16	24
3	I.535.22.00.D.3.V	535	466.5	400	380	40	40	50	510	16	13	420	16	M 12x1.25	384	4	96	11	22	32

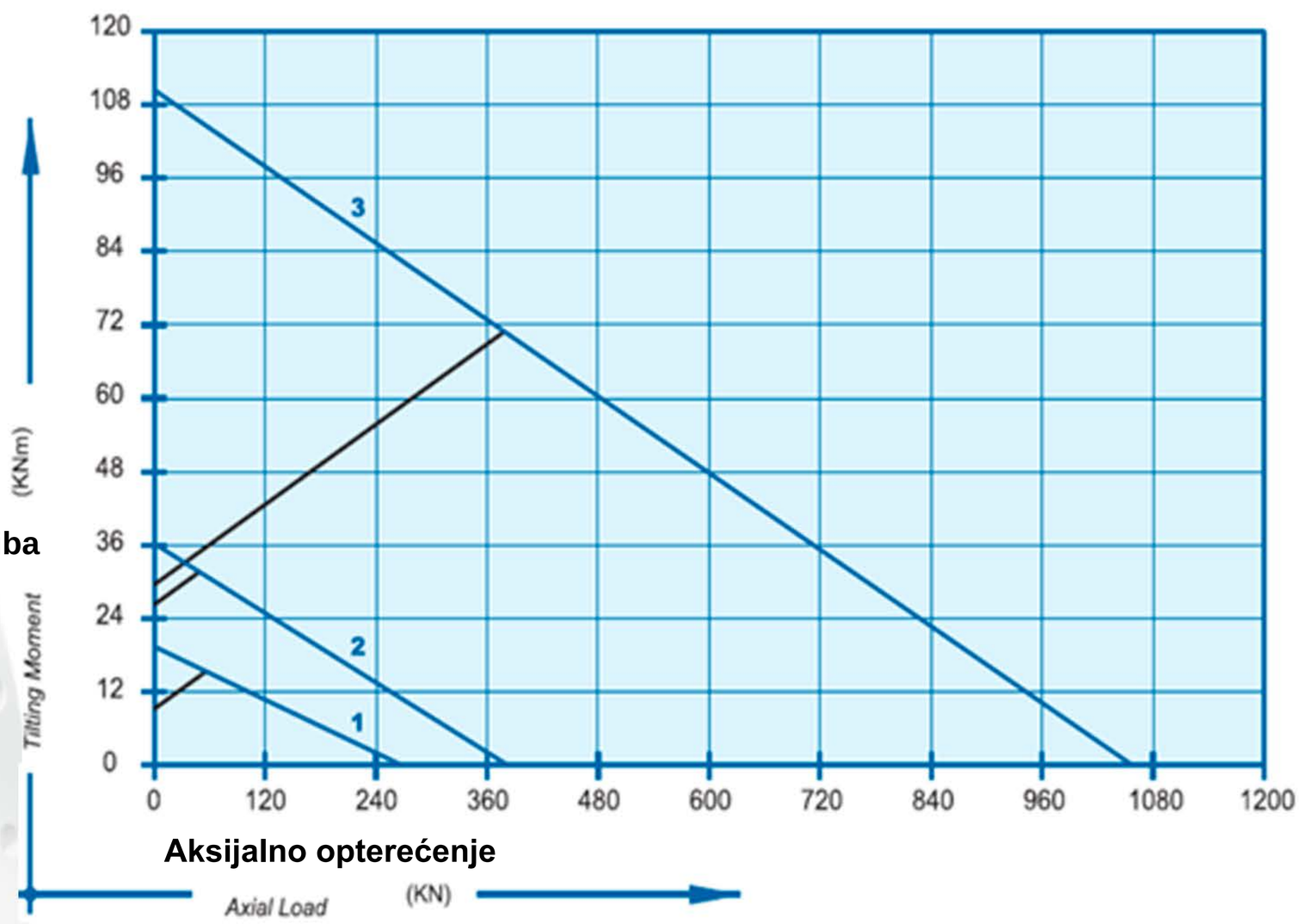

Posebni okretni prstenovi s unutarnjim zupcima / Special slewing ring internal teeth

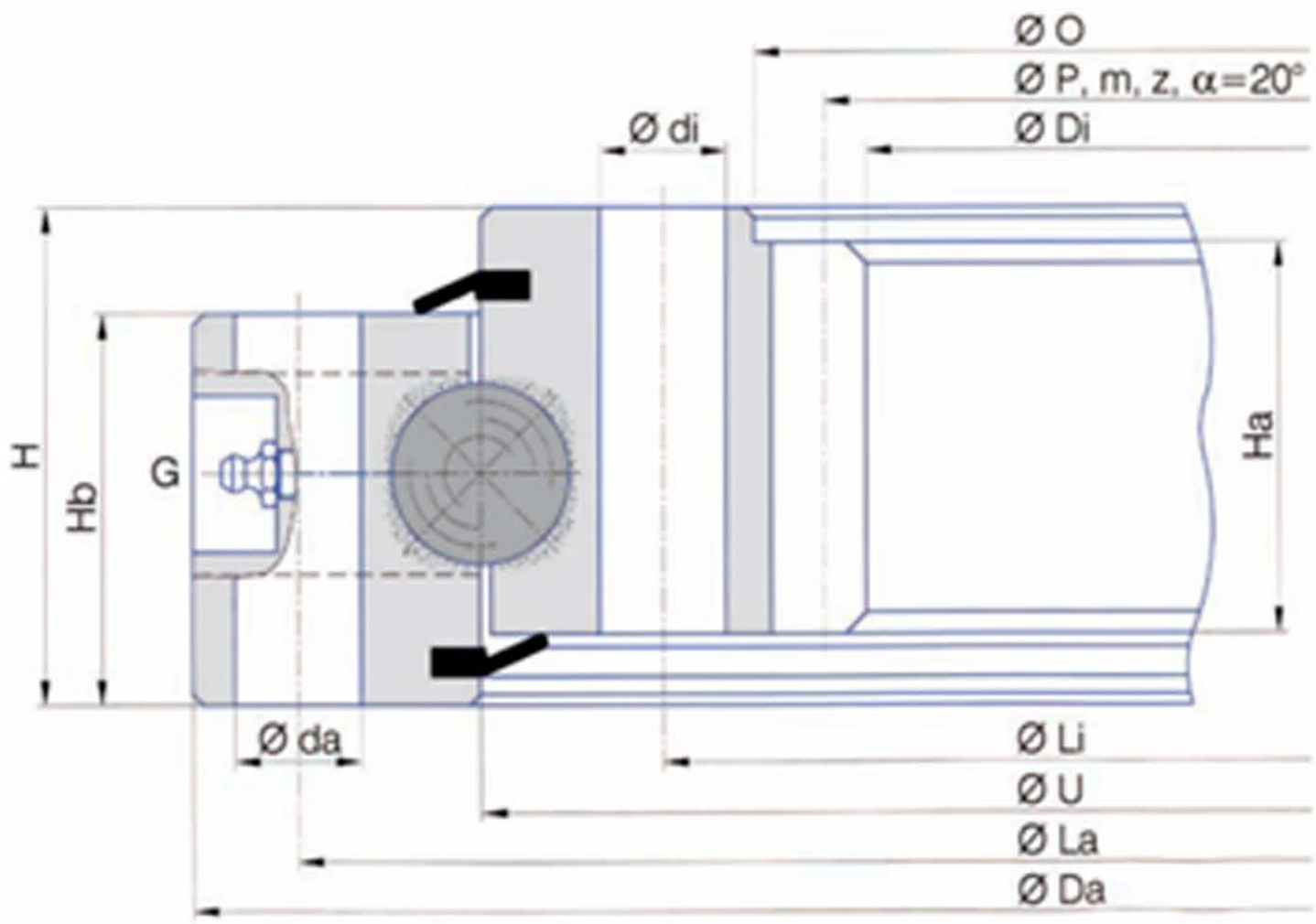

	Tip ležaja / *Bearing type*	Dimenzije / *Dimensions*							Rupe za pričvršćivanje / *Fixing holes*						Zubi zupčanika / *Gear teeth*			Sila zuba / *Tooth force*		Masa / *Mass*
		Da mm	U mm	O mm	Di mm	Ha mm	Hb mm	H mm	La mm	na n°	da mm	Li mm	ni n°	di mm	P mm	m	z n°	Fz nor KN	Fz max KN	Težina / *Weight* Kg
1	I.562.25.15.D.1	560	489	418	385	43	50	60	538	30	14	440	30	14	396	6	66	18	36	41
2	I.570.25.00.D.1	570	488	410	378	55	55	70	540	18	18	436	18	18	390	6	65	18	36	54
3	I.635.25.00.D.3.V	635	547	467	439.5	50	50	60	605	24	15	490	16	M 16x1.5	444	6	74	23	46	57
4	I.750.25.00.D.1	750	663	575	546	55	55	70	720	20	18	605	20	18	558	6	93	18	36	76
5	I.850.25.00.D.1	850	762	677	648	55	55	70	820	24	18	705	24	18	660	6	110	18	36	91
6	I.950.25.00.D.1	950	862	775	736	55	55	70	920	30	18	805	30	18	752	8	94	25	50	108
7	I.980.25.00.D.3	975	892	824	784	72	66	84	944	36	18	850	36	M16	800	8	100	35	70	135
8	I.1015.25.15.D.1	1015	920	824	784	67	66	82	980	40	18	860	40	18	800	8	100	34	68	143

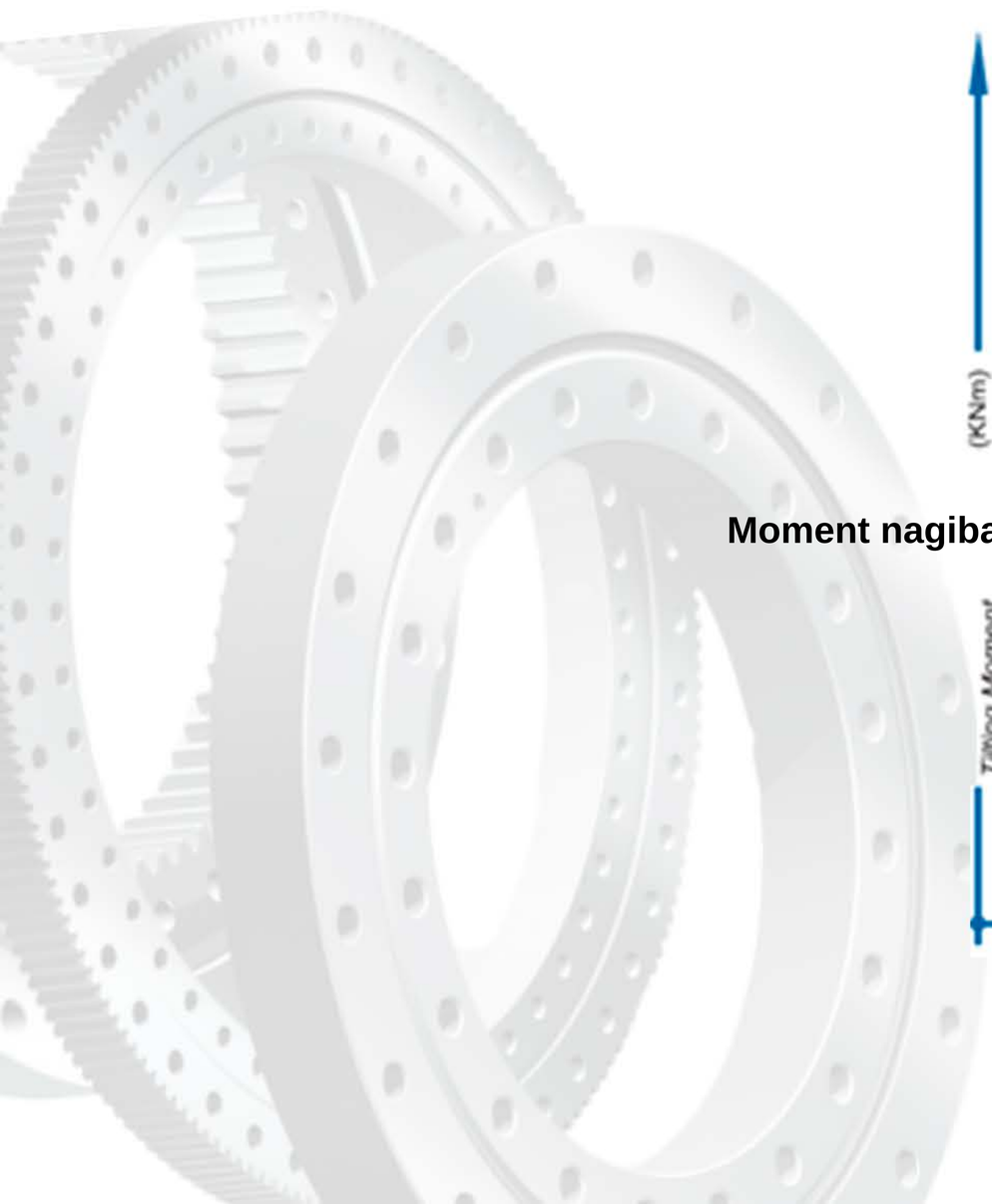

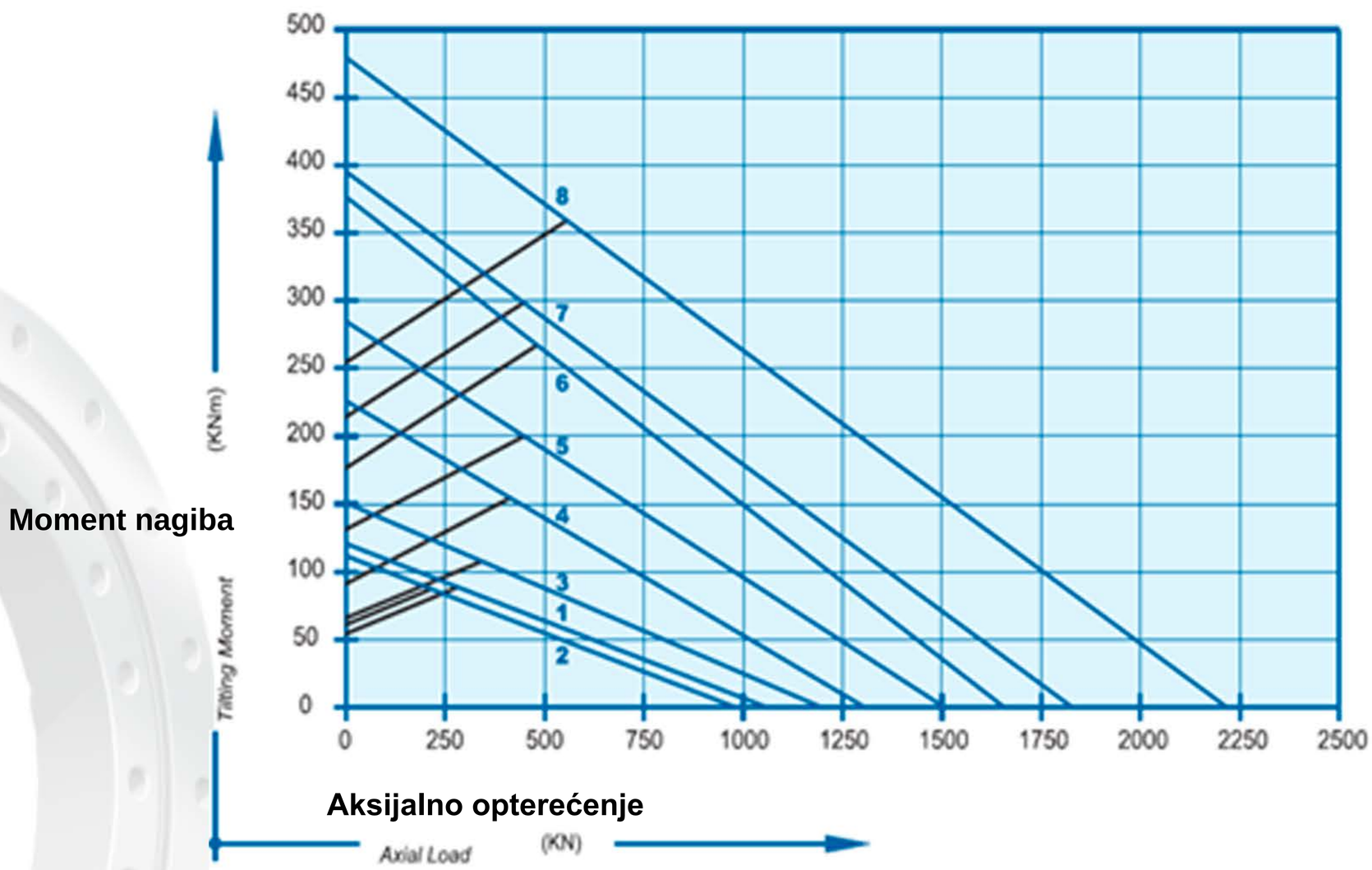

Posebni okretni prstenovi s unutarnjim zupcima / Special slewing ring internal teeth

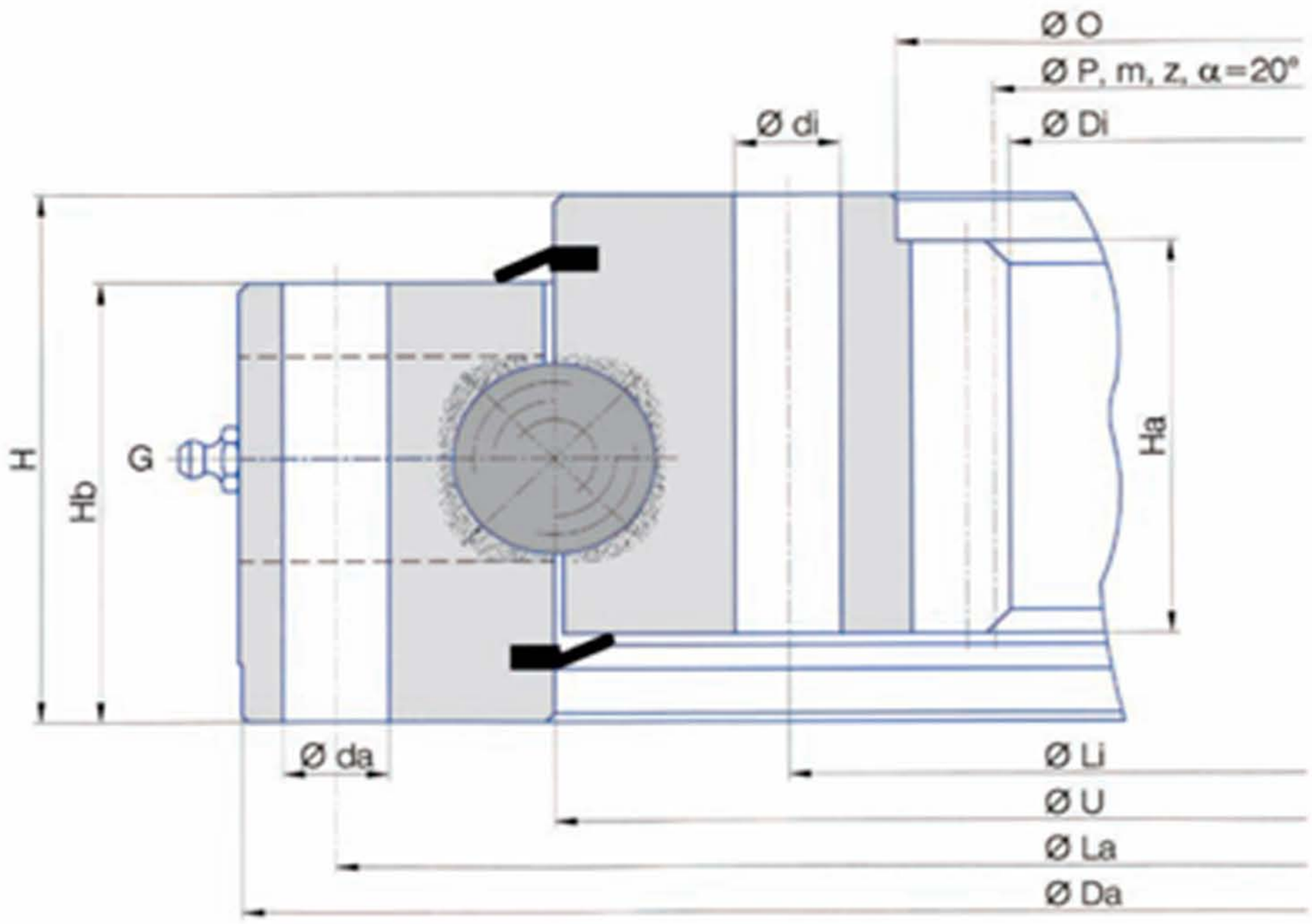

	Tip ležaja / *Bearing type*	Dimenzije / *Dimensions*							Rupe za učvršćivanje / *fixing holes*						Zubi zupčanika / *Gear teeth*			Sila zuba / *Tooth force*		Masa / *Mass*
		Da mm	U mm	O mm	Di mm	Ha mm	Hb mm	H mm	La mm	na n°	da mm	Li mm	ni n°	di mm	P mm	m	z n°	Fz nor KN	Fz max KN	Težina / *Weight* Kg
1	I.810.32.00.D.1	810	720	630	601	60	68	80	780	20	18	660	20	18	612	6	102	18	36	110
2	I.815.32.10.D.1	810	720	630	593	60	68	80	780	30	18	660	30	18	608	8	76	33	66	110
3	I.816.32.10.D.1	815	712.5	605	568.9	67	75	90	785	18	17	640	18	17	574	7	82	31	62	143

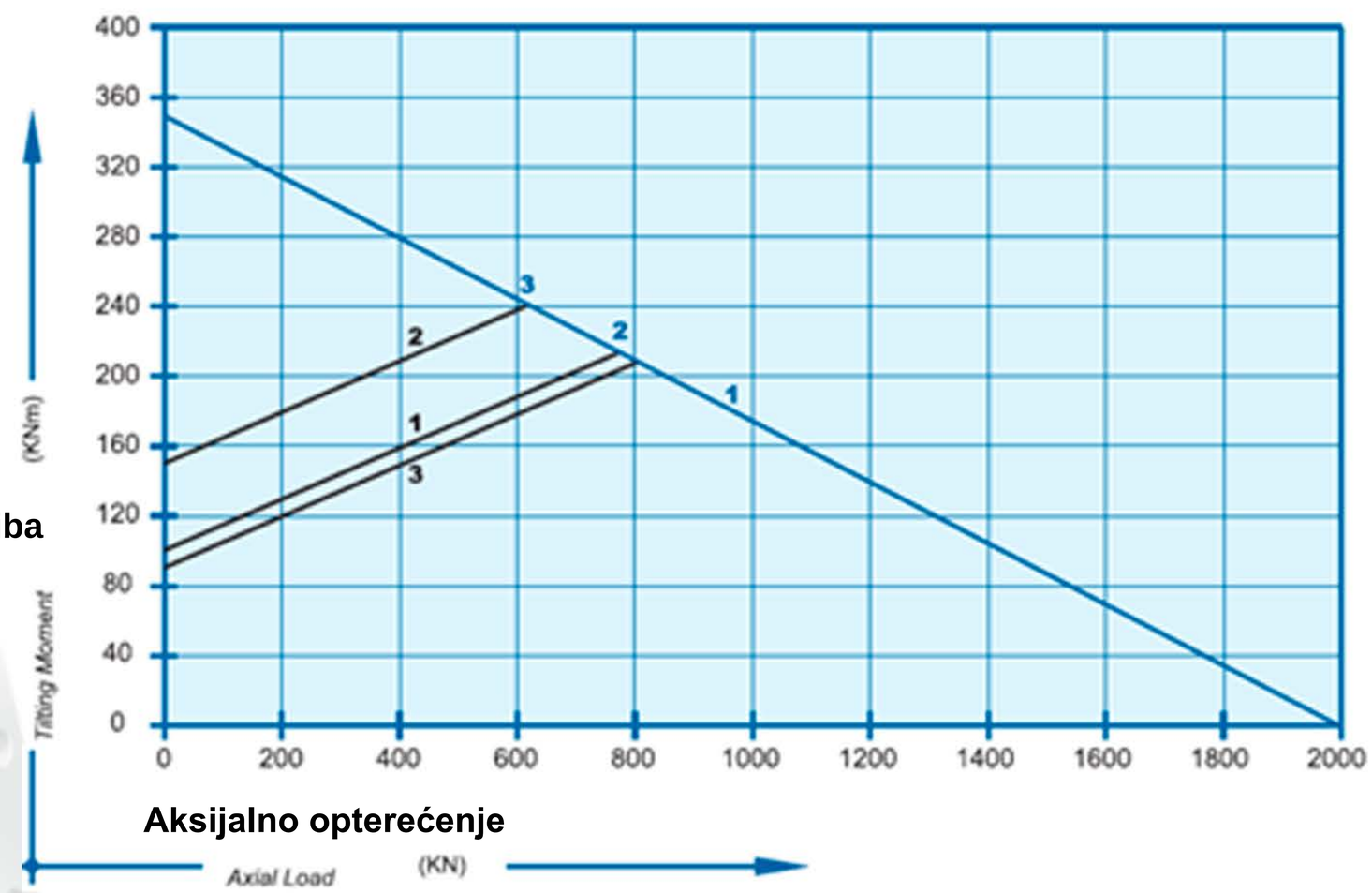

Posebni okretni prstenovi s unutarnjim zupcima / Special slewing ring internal teeth

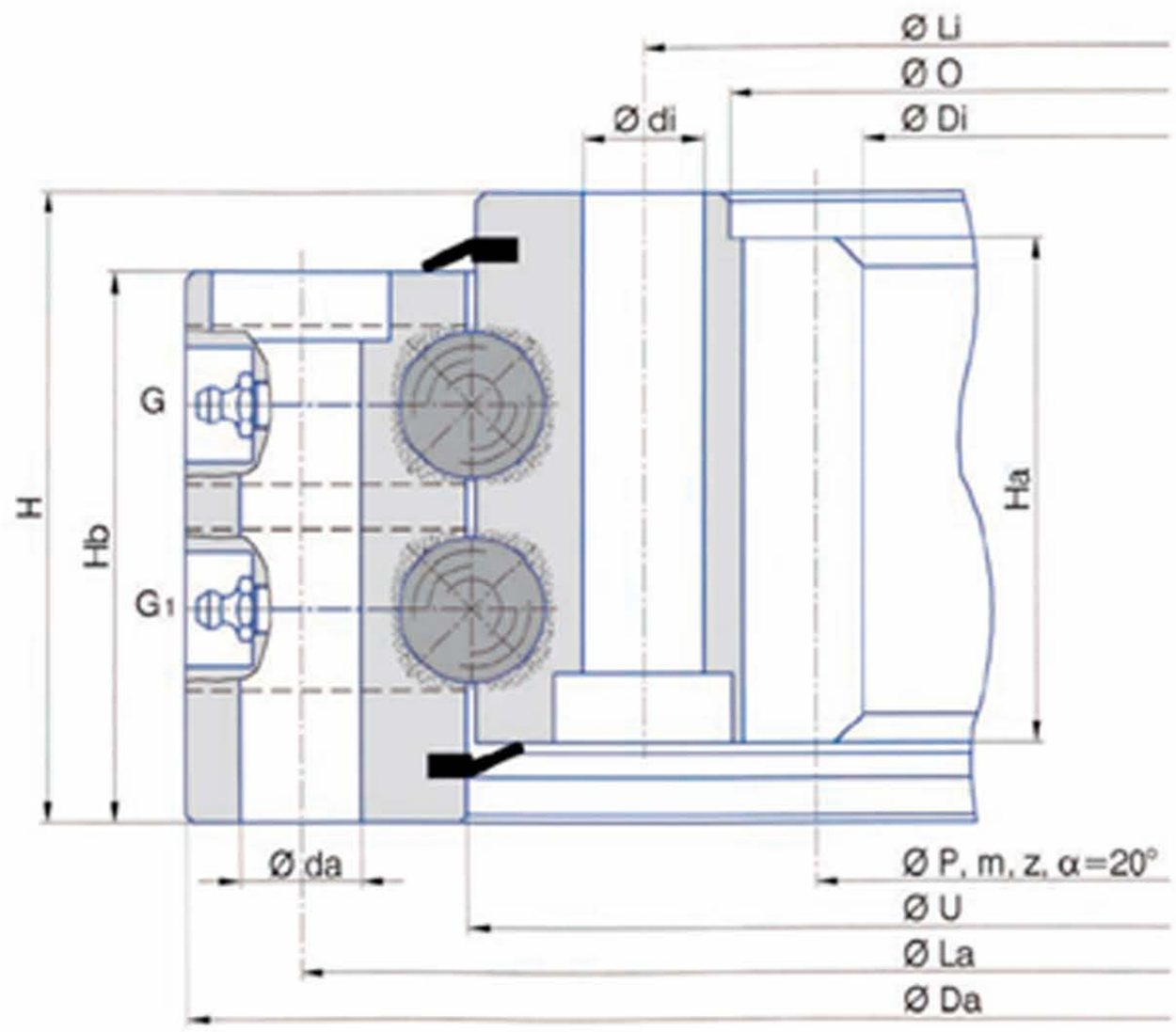
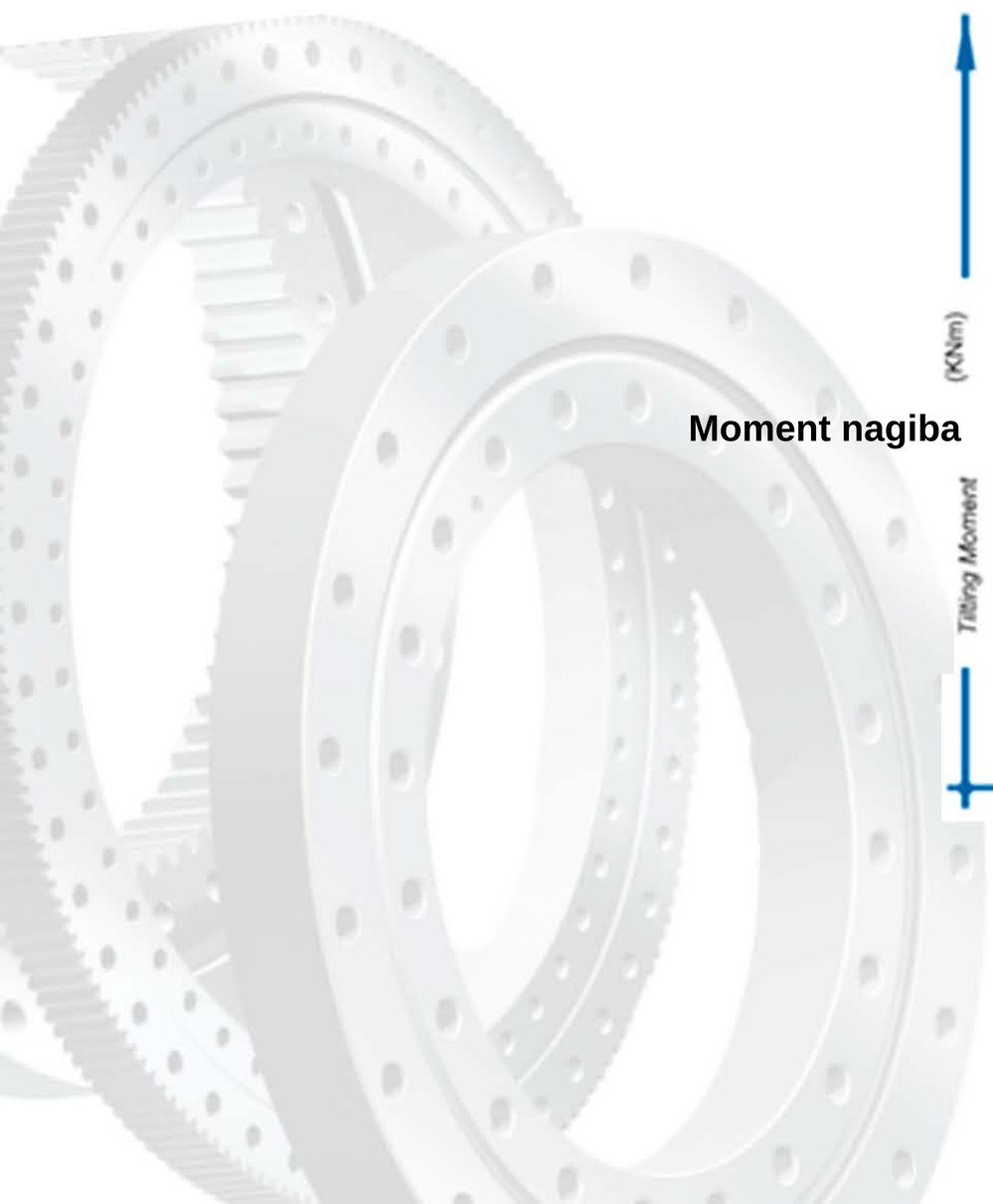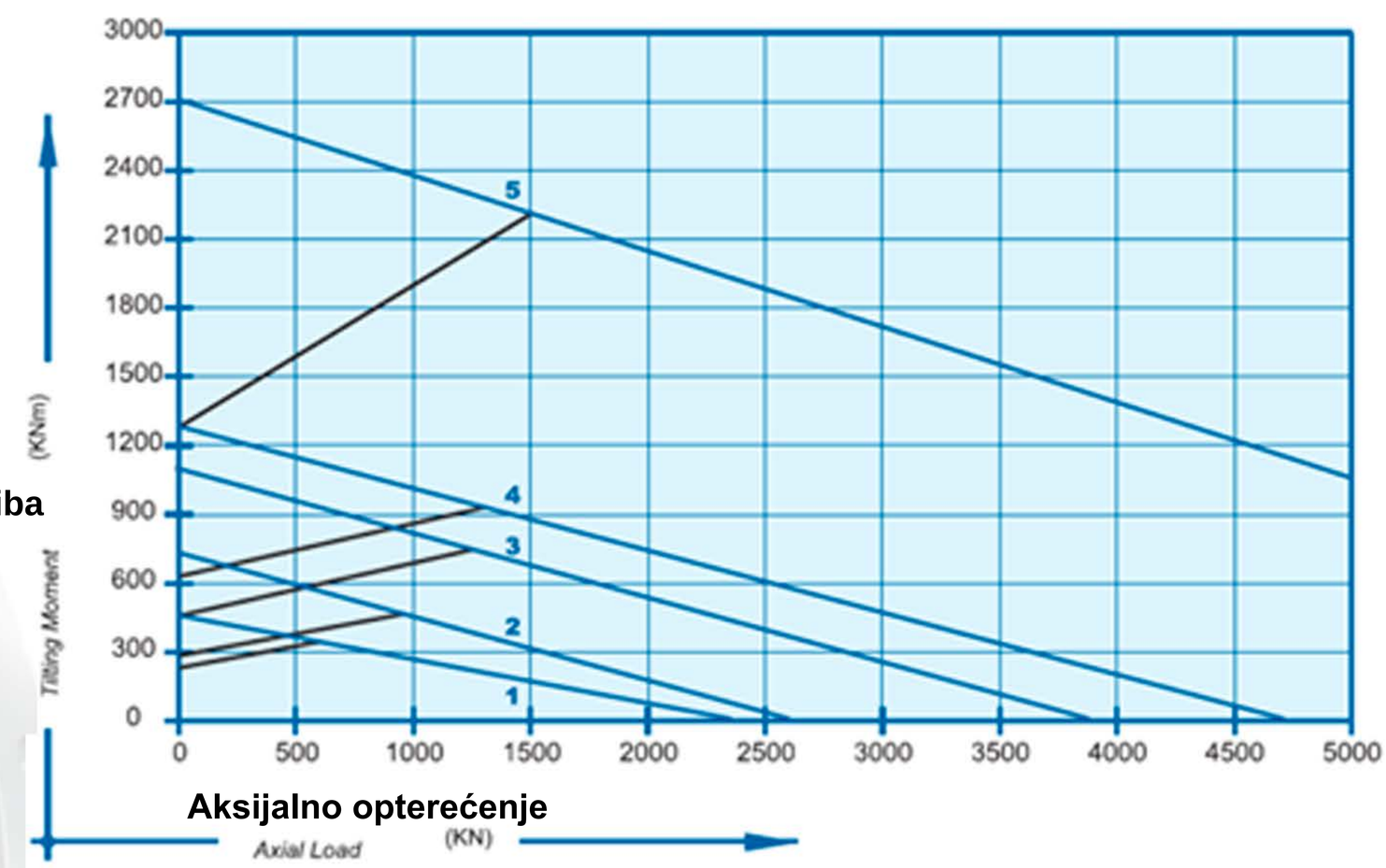
	Tip ležaja / *Bearing type*	Dimenzije / *Dimensions*							Rupe za pričvršćivanje / *Fixing holes*						Zubi zupčanika / *Gear teeth*			Sila zuba / *Tooth force*		Masa / *Mass*
		Da mm	U mm	O mm	Di mm	Ha mm	Hb mm	H mm	La mm	na n°	da mm	Li mm	ni n°	di mm	P mm	m	z n°	Fz nor KN	Fz max KN	Težina / *Weight* Kg
1	I.973.2.22.00.D.6	973	899	820	786	80	88	97	944	36	17	850	36	17	800	8	100	36,2	72,4	141
2	I.1165.2.22.00.D.6	1165	1090	1010	962	80	88	97	1134	36	17	1040	36	17	980	10	98	45	90	187
3	I.1200.2.25.00.D.6	1200	1102	1010	963.5	88	96	110	1160	36	21	1040	36	21	980	10	98	50	100	230
4	I.1346.2.30.05.D.6	1345	1225	1115	1061.6	88	98	108	1290	48	21	1150	48	21	1080	10	108	68.9	137.8	326
5	I.1750.2.30.20.D.6	1750	1616	1470	1418.4	98	110	120	1705	48	25	1525	48	25	1440	12	120	92	184	564