Technical data

7204B

Single row or matched pairs of angular contact ball bearings

Angular contact ball bearings, pressed steel cage

VISUAL (S)

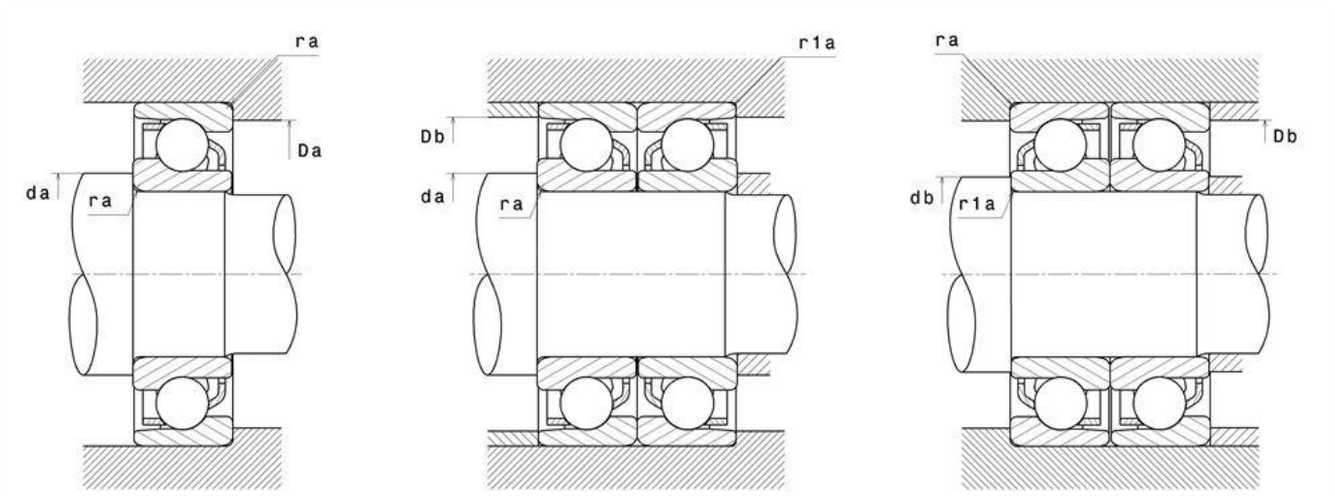

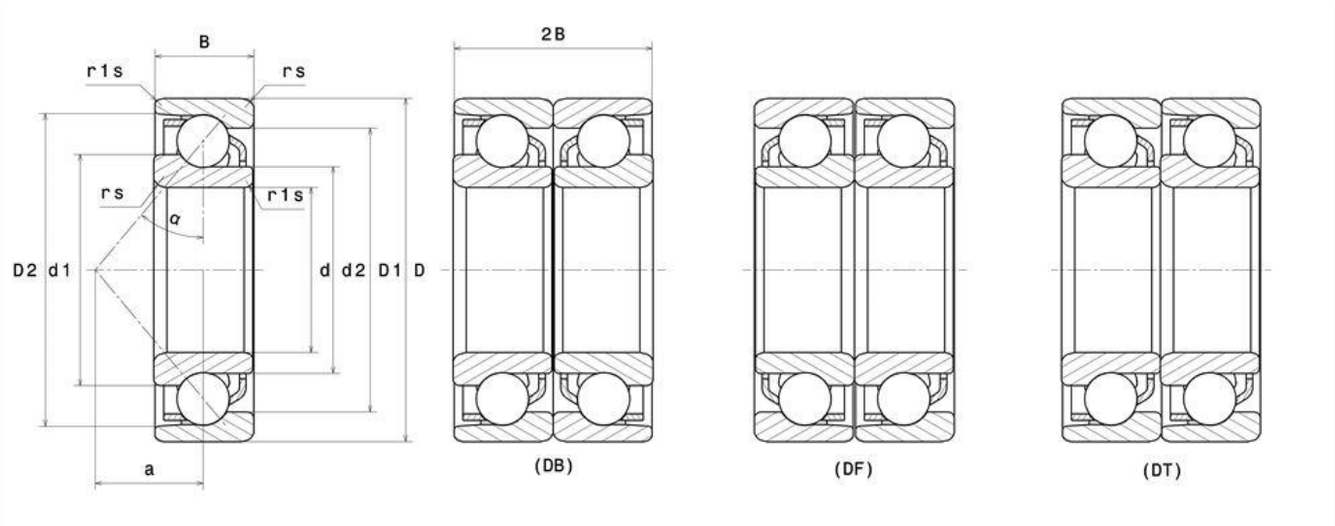

7204B

Single row or matched pairs of angular contact ball bearings

PRODUCT DIMENSIONS	
Internal diameter d	20 mm
External diameter D	47 mm
Bearing/Inner ring width(B)	14 mm
Charge load application point a	21,5 mm
Contact angle	40.0 °
Min fillet radius rs	1 mm
Min fillet radius r1s	0,6 mm
Radial clearance class	CN
Mass	0,102 kg
Brand	NTN

PRODUCT PERFORMANCE	
Dynamic load, C	14,7 kN
Static load, C0	7,7 kN
Fatigue limit load, Cu	0,605 kN
Nlim (oil)	20000 tr/min
Nlim (grease)	15000 tr/min
Min operating temperature, Tmin	-40 °C
Max operating temperature, Tmax	120 °C
Characteristic cage frequency, FTF	0.412 Hz
Characteristic rolling element frequency, BSF	4.217 Hz
Characteristic outer ring frequency, BPF0	4.532 Hz
Characteristic inner ring frequency, BPFI	6.468 Hz

ABUTMENT	
Min shoulder diameter IR da min	25,5 mm
Min IR shoulder diameter (db min)	24,5 mm
Max shoulder diameter OR Da max	41,5 mm
Max OR shoulder diameter (Db max)	42,5 mm
Maxi fillet radius r1a	0,6 mm
Max shaft & housing fillet radius ra max	1 mm

7204B

Single row or matched pairs of angular contact ball bearings

INDUSTRY CALCUL FACTORS

Equivalent dynamic radial load

P = X.Fr + Y.Fa

	e	Single or DT bearing arrangement				DB or DF arrangement			
		Fa / Fr ≤ e		Fa / Fr > e		Fa / Fr ≤ e		Fa / Fr > e	
		X	Y	X	Y	X	Y	X	Y
30°	0.8	1	0	0.9	0.76	1	0.78	0.63	1.24
40°	1.14			0.35	0.57		0.55	0.57	0.93

Equivalent static radial load

Po = Xo.Fr + Yo.Fa

a	Single or DT bearing arrangement		DB or DF arrangement	
	X_0	Y_0	X_0	Y_0
30°	0.5	0.33	1	0.66
40°		0.26		0.52

For single or DT bearing arrangement :

If P_0 <Fr, then use P_0 = Fr